DATA SHEET

(DOC No. HX8282-A01(A)-DS)

HX8282-A01(A)

1536CH TFT LCD Source Driver
with LVDS TCON

Preliminary Version 01 July, 2011

Himax Technologies, Inc.
http://www.himax.com.tw

List of Contents

July, 2011

1. General Description 6
2. Features 7
3. Block Diagram 8
3.1 Function block diagram 8
3.2 Application block diagram 9
3.2.1 Dual gate (Gate on right side) 9
3.2.2 Dual gate (Gate on left side) 10
3.2.3 Cascade with Two-FPC (Gate on right side) 11
3.2.4 Cascade with Two-FPC (Gate on left side) 12
3.3 Application power circuit 13
4. Pin Description 14
4.1 Pin description 14
4.2 Value of wiring resistance to each pin 19
5. The BIST Pattern For Aging Mode Test 20
5.1 The BIST pattern for aging mode test 20
6. Gamma Adjustment Function 21
6.1 Gamma table 21
6.2 Positive polarity and negative polarity 22
7. 3-wire Serial Peripheral Interface (SPI) 24
7.1 SPI format 24
7.2 SPI register list 25
7.3 Function control 1 (R00h) 25
7.4 Function control 2 (R01h) 25
8. Power On/Off Sequence 26
8.1 Power on/off control 26
9. DC Characteristics 29
9.1 Absolute maximum rating (GND=AGND=0V) 29
9.2 DC electrical characteristics 30
9.2.1 TTL mode DC electrical characteristics 30
9.2.2 LVDS mode DC electrical characteristics 31
9.2.3 PWM power table 32
9.3 Half voltage 33
10. AC Characteristics 34
10.1 AC electrical characteristics 34
10.1.1 TTL mode AC electrical characteristics 34
10.1.2 LVDS mode AC electrical characteristics 34
10.2 Data input format 36
10.2.1 TTL mode data input format 36
10.2.2 LVDS mode data input format 37
10.3 Parallel RGB input timing table 38
10.3.1 Resolution：1024x600 38
10.3.2 Resolution：1024x768 39
10.3.3 Resolution：800x600 40
10.3.4 Resolution：800 x480 41
10.3.5 Resolution：960 x540 42
11. Timing 43
11.1 Output timing table 43
11.2 Timing diagram 44
11.2.1 Input clock and data timing diagram 44
11.2.2 Source output timing diagram (Cascade) 44
11.2.3 Vertical timing diagram HV (Cascade) 45
11.2.4 Vertical timing diagram DE (Cascade) 45
11.2.5 Gate output timing diagram (Cascade) 45
11.2.6 Vertical timing diagram HV (Dual gate) 46

Himax Confidential
Do Not Copy

11.2.7 Vertical timing diagram DE (Dual gate) 46
11.2.8 Gate output timing diagram (Dual gate) 46
11.2.9 SDRRS timing diagram 47
12. Pin Assignment (IC Face View) 48
12.1 PAD sequence 48
12.2 Bump information 49
12.2.1 Chip outline dimensions 49
12.2.2 Alignment mark 50
12.2.3 Pad information 50
12.3 Pad coordinates 50
13. Ordering Information 70
14. Revision History 70

Himax Confidential
Do Not Copy

This information contained herein is the exclusive property of Himax and shall not be distributed, reproduced, or disclosed in whole or in part without prior written permission of Himax.

List of Figures

Figure 3.1: HX8282-A01 function block diagram 8
Figure 3.2: Dual gate (Gate on right side) 9
Figure 3.3: Dual gate (Gate on left side) 10
Figure 3.4: Cascade with Two-FPC (Gate on right side) 11
Figure 3.5: Cascade with Two-FPC (Gate on left side) 12
Figure 3.6: Application power circuit 13
Figure 6.1: Gamma curve 21
Figure 7.1: SPI format 24
Figure 7.2: Write format 24
Figure 7.3: Read format 24
Figure 8.1: Power on timing sequence 27
Figure 8.2: Power off timing sequence 28
Figure 9.1: Single-end signals 31
Figure 9.2: Traditional SD and Half-voltage SD 33
Figure 9.3: Half-voltage SD and gamma voltage relation 33
Figure 10.1: LVDS figure 35
Figure 10.2: Vertical input timing diagram 36
Figure 10.3: Horizontal input timing diagram 36
Figure 10.4: 6-bit LVDS input 37
Figure 10.5: 8-bit LVDS Input 37
Figure 11.1: Input clock and data timing diagram 44
Figure 11.2: Source output timing diagram 44
Figure 11.3: Output load condition 44
Figure 11.4: Vertical timing diagram HV (Cascade) 45
Figure 11.5: Vertical timing diagram DE (Cascade) 45
Figure 11.6: Gate output timing diagram (Cascade) 45
Figure 11.7: Vertical timing diagram HV (Dual gate) 46
Figure 11.8: Vertical timing diagram DE (Dual gate) 46
Figure 11.9: Gate output timing diagram (Dual gate) 46
Figure 11.10: SDRRS timing diagram 47
Figure 12.1: Pad sequence 48
Figure 12.2: Chip outline dimensions 49
Figure 12.3: Alignment mark 50
Figure 12.4: Pad coordinate 50

Himax Confidential
Do Not Copy

This information contained herein is the exclusive property of Himax and shall not be distributed, reproduced, or disclosed in whole or in part without prior written permission of Himax.

List of Tables

Table 4.1: Pad description 17
Table 4.2: HX8282-A01 passes line description 18
Table 4.3: Wiring resistance values 19
Table 5.1: BIST mode pattern 20
Table 6.1: Positive polarity 22
Table 6.2: Negative polarity 23
Table 7.1: Register map 25
Table 7.2: Function control 1 register 25
Table 7.3: Function control 2 register 25
Table 9.1: Absolute maximum rating 29
Table 9.2: DC electrical characteristics 30
Table 9.3: LVDS mode DC electrical characteristics 31
Table 9.4: Power table 32
Table 10.1: TTL mode AC electrical characteristics 34
Table 10.2: LVDS mode AC electrical characteristics 34
Table 10.3: SSC table 35
Table 10.4: DE mode (1024x600) 38
Table 10.5: HV mode horizontal timing (1024x600) 38
Table 10.6: HV Mode Vertical Timing (1024x600) 38
Table 10.7: DE mode (1024x768) 39
Table 10.8: HV mode horizontal timing (1024x768) 39
Table 10.9: HV mode vertical timing (1024x768) 39
Table 10.10: DE mode (800x600) 40
Table 10.11: HV mode horizontal timing (800x600) 40
Table 10.12: HV mode vertical timing (800x600) 40
Table 10.13: DE mode (800x480) 41
Table 10.14: HV mode horizontal timing (800x480) 41
Table 10.15: HV mode vertical timing (800x480) 41
Table 10.16: DE mode (960x540) 42
Table 10.17: HV mode horizontal timing (960x540) 42
Table 10.18: HV mode vertical timing (960x540) 42
Table 11.1: Parallel 24-bit RGB mode 43
Table 12.1: Pad information 50
Table 12.2: Pad coordinate 69

Himax Confidential
Do Not Copy

This information contained herein is the exclusive property of Himax and shall not be distributed, reproduced, or disclosed in whole or in part without prior written permission of Himax.

1. General Description

HX8282-A01 is a 1536-channel outputs source driver with LVDS, TCON, and 3-wire Serial Port Interface. This chip integrates 1536ch dual gate mode source driver with LVDS and parallel RGB input interface. The TCON generates the 1024x600, 1024x768, 800x600, 800x480 and 960x540 resolutions and provides horizontal and vertical control timing to source driver and gate driver.

It also supports dithering feature, apply source driver with 6-bit DAC to perform 8-bit resolution 256 gray scales. The source driver receives 6-bit by 3 dots of digital display data per clock from TCON and generates corresponding 64-level gray scale voltage output. Since the output circuit of this source driver incorporates an operational amplifier with low power dissipation, and performs wide voltage supply range and small output deviation. Therefore, a high quality display with less crosstalk can be achieved.

Himax Confidential
Do Not Copy

2. Features

TCON

- Support display resolution 1024 RGB x 600, 1024 RGB x768, 800RGBx600, 800RGBx480 and 960RGBx540.
- Support LVDS/TTL interface
- Support single or dual gate function
- Support cascade function with bidirectional shift control (CMOS signal)
- Internal dithering 8-bit data to 6-bit data for Source Driver Circuit(6-bit DAC + 2-bit FRC or HFRC)
- Built-In CABC function
- Built-In AUTO pattern
- Built-In SDRRS function
- Only support stripe types of panel group
- Operation frequency: 71 MHz max
- Provide source and gate drivers control timing
- Provide flip and mirror scan control
- Operation Voltage Level 2.3V to 3.6V

Source Driver

- 1536 channels output source driver for TFT LCD panel
- Embedded Gamma Table for special custom request
- V1~V14 for adjusting Gamma correction
- Dynamic output range: 0.1 to AVDD-0.1V
- Voltage deviation of outputs: ±20mV
- Dot inversion and 1+2 Dot inversion driving scheme
- Right and left shift capability
- LCD power: 6.5 to 13.5V

Power

- Built-In PWM controller for AVDD , VGH / VGL , and VCOM buffer
- Support Half voltage source driver

Application

- Special designed for low cost UMPC application

Others

- COG package

Himax Confidential
Do Not Copy

This information contained herein is the exclusive property of Himax and shall not be distributed, reproduced, or disclosed in whole or in part without prior written permission of Himax.

3. Block Diagram

3.1 Function block diagram

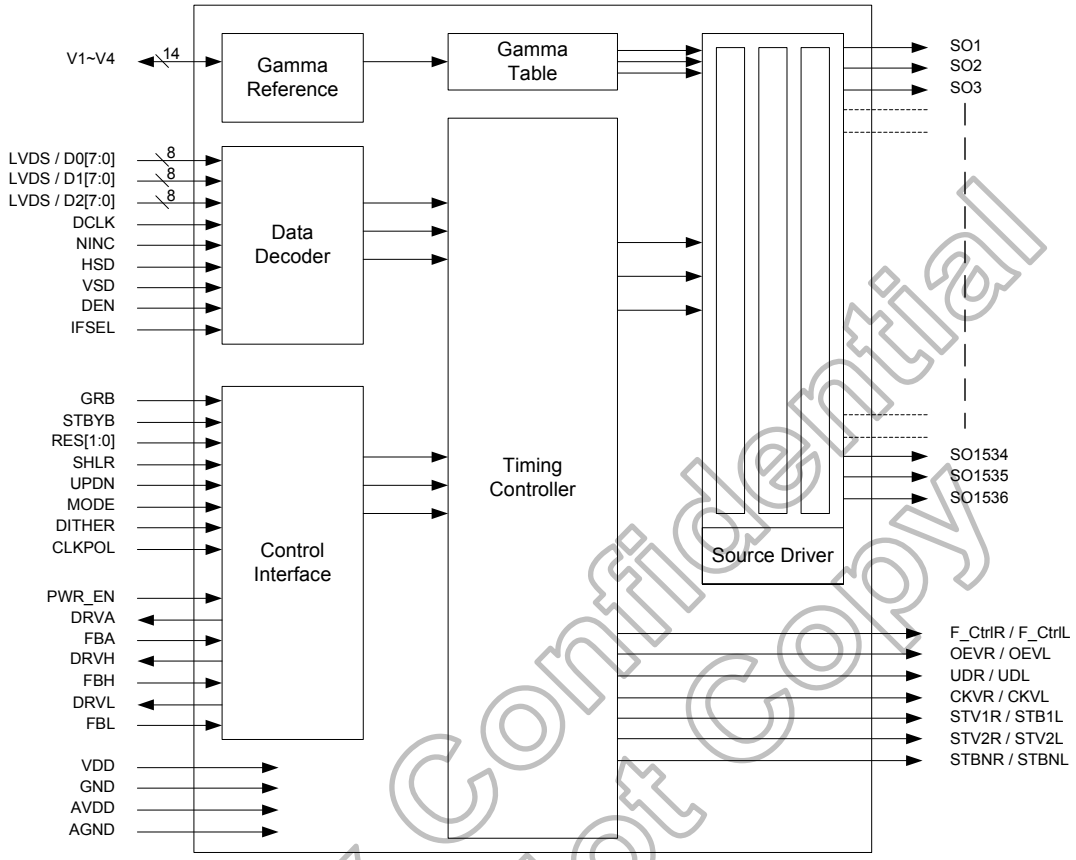

Figure 3.1: HX8282-A01 function block diagram

Himax Confidential
Do Not Copy

This information contained herein is the exclusive property of Himax and shall not be distributed, reproduced, or disclosed in whole or in part without prior written permission of Himax.

3.2 Application block diagram

3.2.1 Dual gate (Gate on right side)

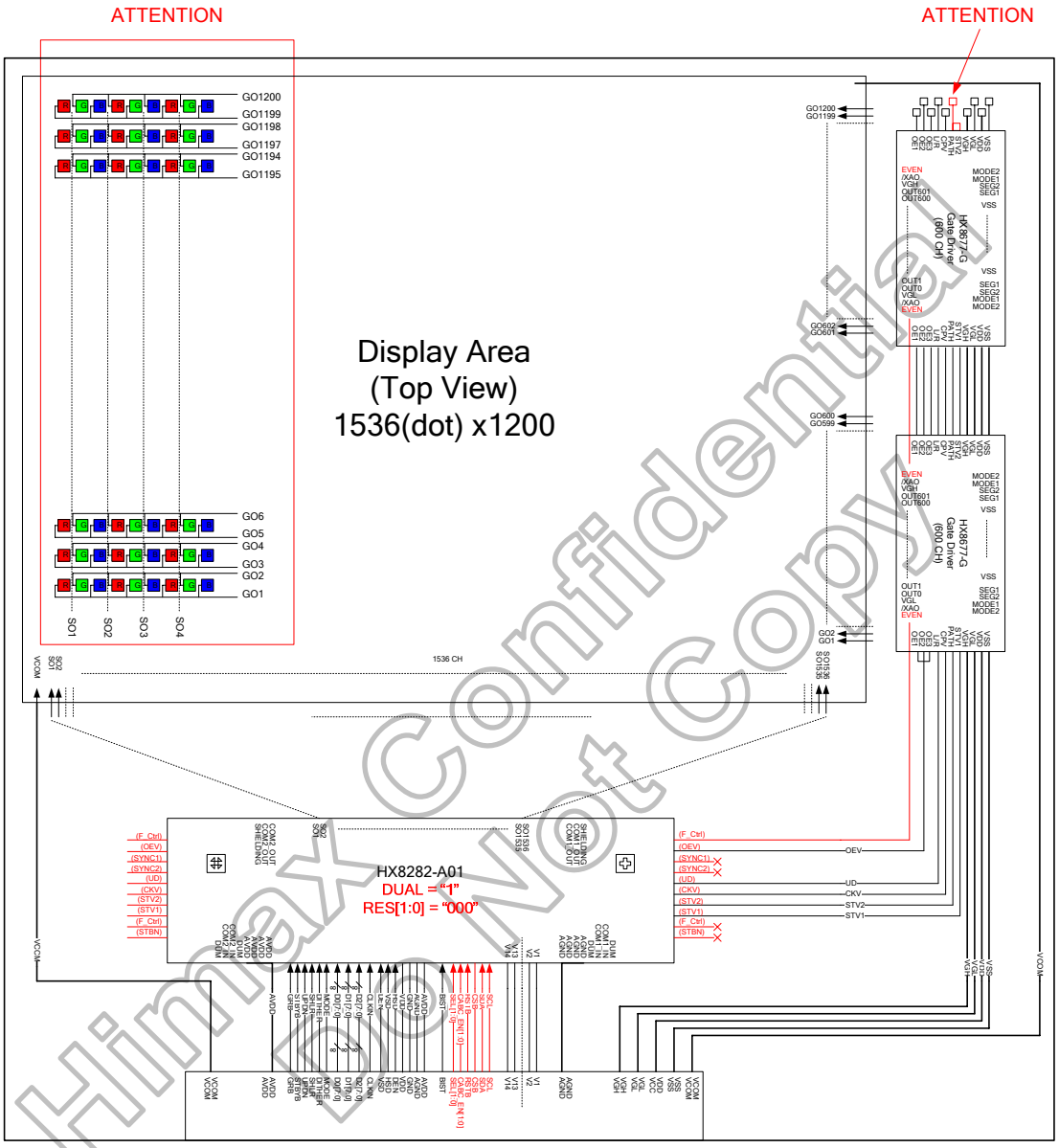

Figure 3.2: Dual gate (Gate on right side)

Himax Confidential
Do Not Copy

3.2.2 Dual gate (Gate on left side)

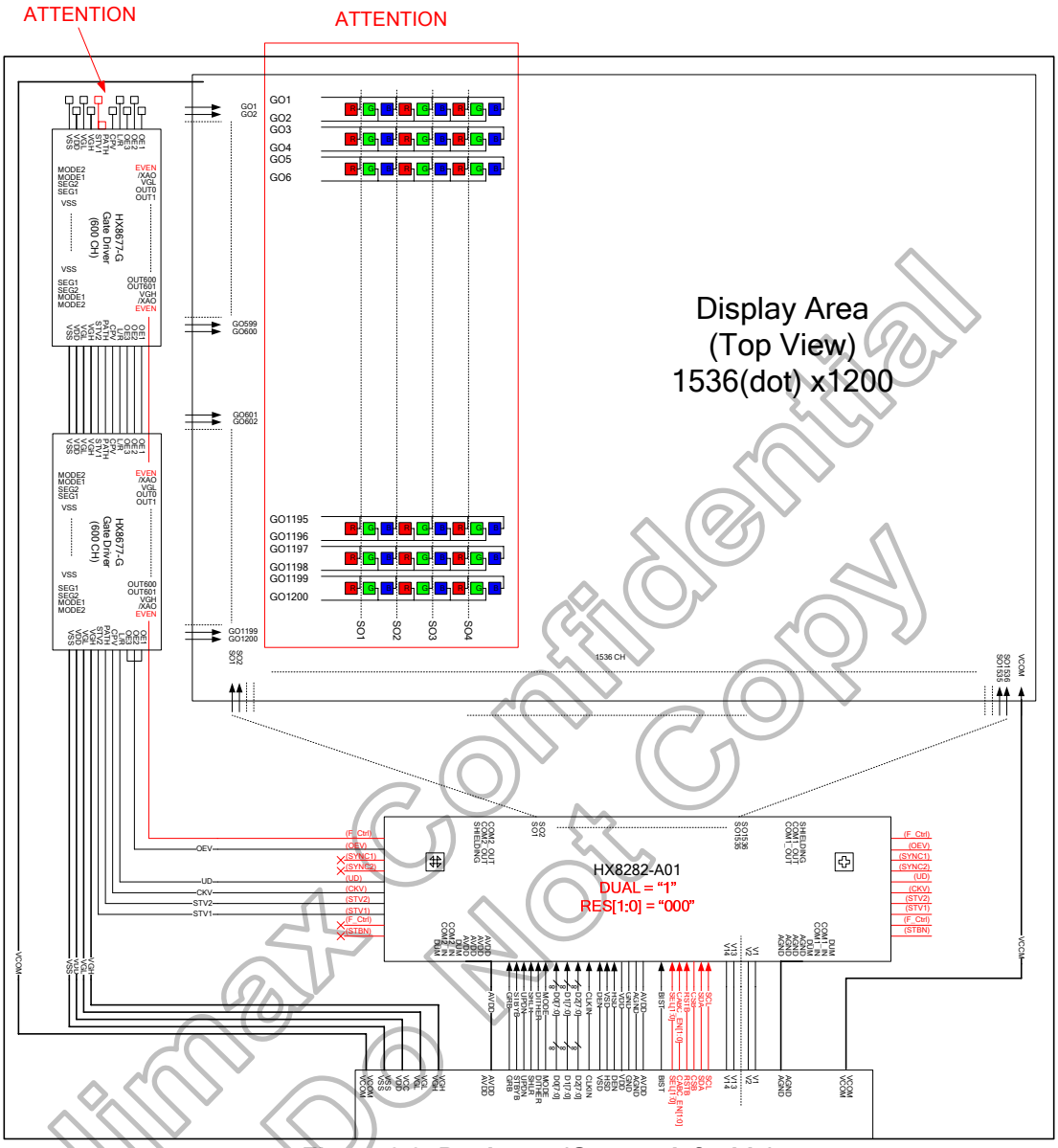

Figure 3.3: Dual gate (Gate on left side)

Himax Confidential
Do Not Copy

3.2.3 Cascade with Two-FPC (Gate on right side)

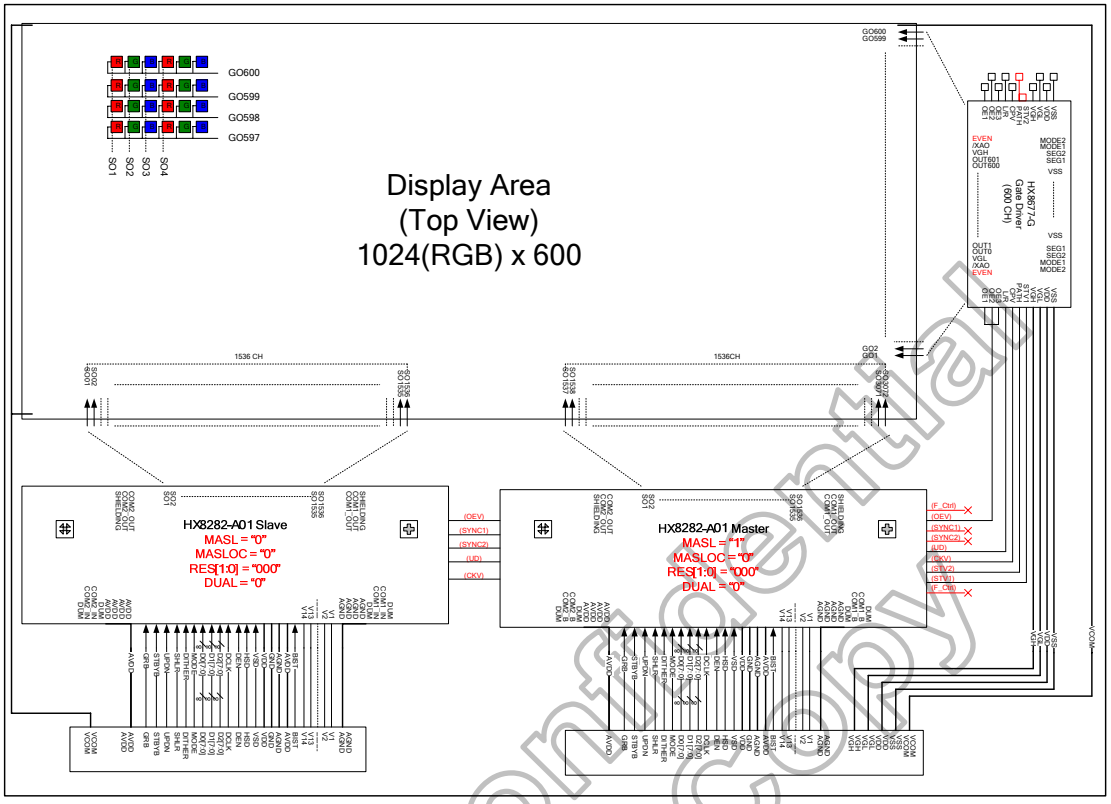

Figure 3.4: Cascade with Two-FPC (Gate on right side)

Himax Confidential
Do Not Copy

3.2.4 Cascade with Two-FPC (Gate on left side)

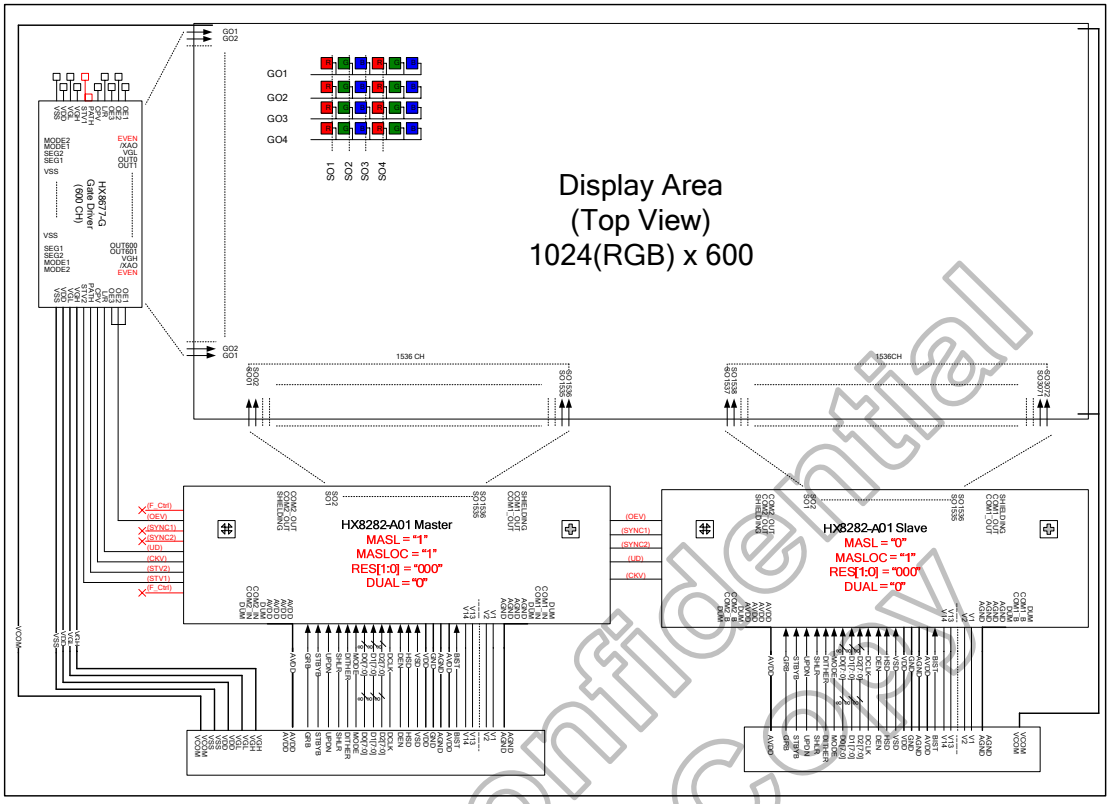

Figure 3.5: Cascade with Two-FPC (Gate on left side)

Himax Confidential
Do Not Copy

3.3 Application power circuit

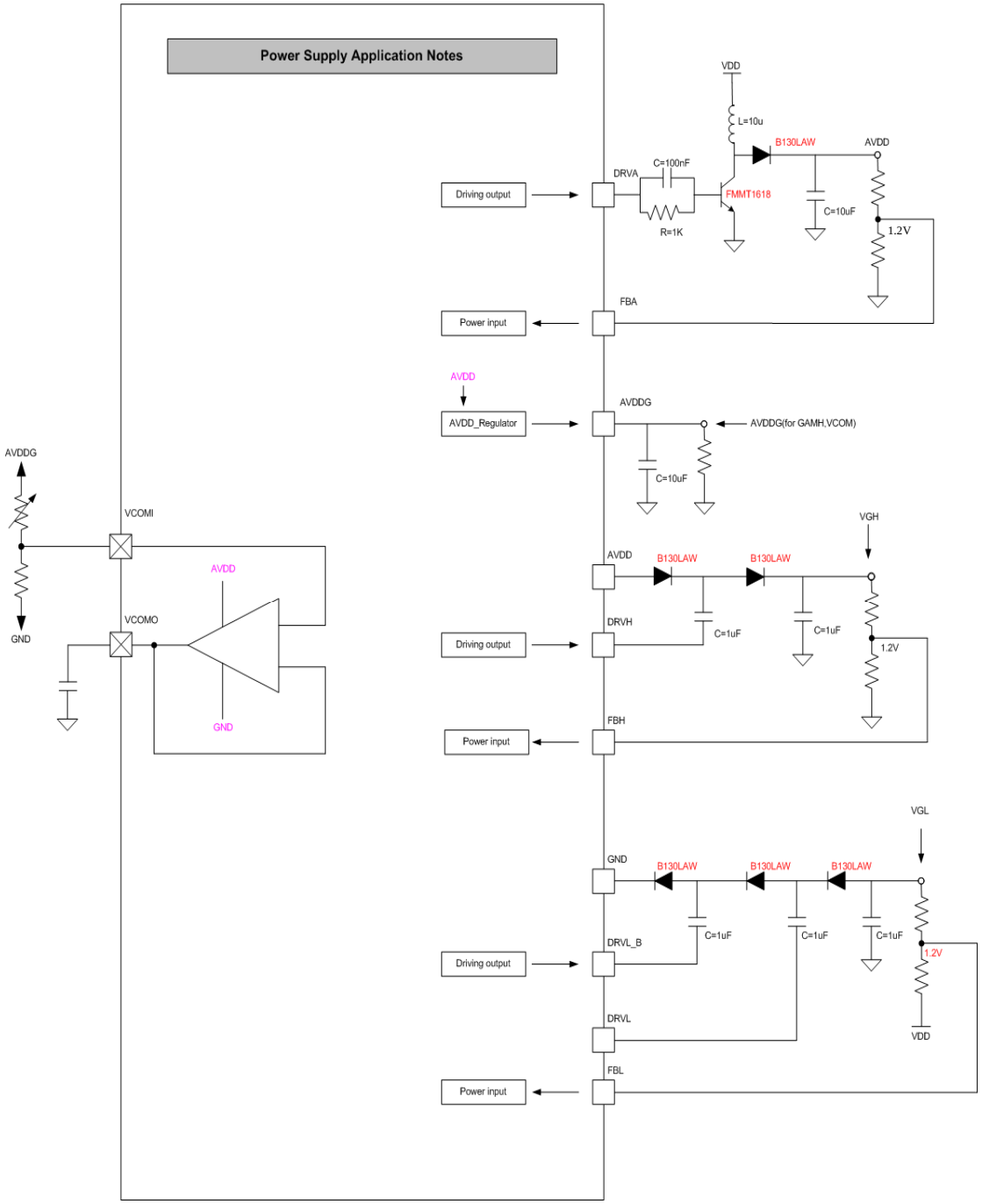

Figure 3.6: Application power circuit

This information contained herein is the exclusive property of Himax and shall not be distributed, reproduced, or disclosed in whole or in part without prior written permission of Himax.

4. Pin Description

4.1 Pin description

<table>
<tr><th>Name</th><th>I/O</th><th>Description</th></tr>
<tr><td>D07~D00
D17~D10
D27~D20</td><td>I</td><td>LVDS or Parallel RGB data input. Select by “IFSEL” pin.
<table>
<tr><td>Input mode</td><td>TTL</td><td>LVDS</td></tr>
<tr><td>IFSEL</td><td>L</td><td>H</td></tr>
<tr><td>D20,D21</td><td>B0,B1</td><td>D0N,D0P</td></tr>
<tr><td>D22,D23</td><td>B2,B3</td><td>D1N,D1P</td></tr>
<tr><td>D24,D25</td><td>B4,B5</td><td>D2N,D2P</td></tr>
<tr><td>D26,D27</td><td>B6,B7</td><td>D3N,D3P</td></tr>
</table>
LVDS 6-bit data input: PIND[2:0],NIND[2:0]
D07~D00=R7~R0 data; D17~D10=G7~G0 data; D27~20=B7~B0 data.
For 18-bit RGB interface, connect two LSB bits of all the R/G/B data buses to GND.
Please note the relation between RGB data and Color Filter sequence.
Note: D07~D00：SO1,SO4…SO1531,SO1534.
D17~D10：SO2,SO5…SO1532,SO1535.
D27~D20：SO3,SO6…SO1533,SO1536.</td></tr>
<tr><td>DCLK</td><td>I</td><td>In TTL mode, DCLK for clock input.
In LVDS mode , PINC for Positive LVDS differential clock input
<table>
<tr><td>IFSEL</td><td>Input mode</td><td>Description</td></tr>
<tr><td>L</td><td>TTL</td><td>DCLK</td></tr>
<tr><td>H</td><td>LVDS</td><td>PINC</td></tr>
</table></td></tr>
<tr><td>NINC</td><td>I</td><td>Negative LVDS differential clock input.</td></tr>
<tr><td>VSD</td><td>I</td><td>In TTL mode, for Vertical Sync input. Negative polarity.
In LVDS mode. Connected to FPC and pull low.</td></tr>
<tr><td>HSD</td><td>I</td><td>In TTL mode, for Horizontal Sync input. Negative polarity.
In LVDS mode, used as 6-bit/8-bit input select.
<table>
<tr><td>HSD</td><td>Bit</td></tr>
<tr><td>L</td><td>8-bit</td></tr>
<tr><td>H</td><td>6-bit</td></tr>
</table></td></tr>
<tr><td>DEN</td><td>I</td><td>Data input enable for TTL mode. Active high to enable the data input. Normally pull low.</td></tr>
<tr><td>MODE</td><td>I</td><td>DE / SYNC mode select. Normally pull high.
When MODE=H, DE mode.
When MODE=L, SYNC mode.</td></tr>
<tr><td>SCL</td><td>I</td><td>Input reference clock for serial interface. Data is fed at the rising edge of the clock. Normally pull low.</td></tr>
<tr><td>SDA</td><td>I/O</td><td>Input for data of serial interface. Normally pull low.</td></tr>
<tr><td>CSB</td><td>I</td><td>Input the chip select signal for serial interface. Normally pull low.
Low: Select. (Enable)
High: Non-select. (Disable)</td></tr>
<tr><td>IFSEL</td><td>I</td><td>TTL / LVDS interface selection. Normally pull low.
When IFSEL=L, TTL interface.
When IFSEL=H, LVDS interface.</td></tr>
<tr><td>DITHER</td><td>I</td><td>Dithering function enable control. Normally pull low.
When DITHER=H, Enable internal dithering function.
When DITHER=L, Disable internal dithering function.</td></tr>
</table>

Himax Confidential
Do Not Copy

This information contained herein is the exclusive property of Himax and shall not be distributed, reproduced, or disclosed in whole or in part without prior written permission of Himax.

<table>
<tr><th>Name</th><th>I/O</th><th>Description</th></tr>
<tr><td>HFRC</td><td>I</td><td>H-FRC selection. Normally pull low.
When HFRC=H: H-FRC enable.
When HFRC=L: FRC enable.
If DITHER=L , disable dithering function.(HFRC and FRC disable)</td></tr>
<tr><td>RESL[2:0]</td><td>I</td><td>Display resolution selection.
<table>
<tr><th>RESL2</th><th>RESL1</th><th>RESL0</th><th>Resolution</th></tr>
<tr><td>0</td><td>0</td><td>0</td><td>1024(RGB)x600 (Default)</td></tr>
<tr><td>0</td><td>0</td><td>1</td><td>1024(RGB)x768</td></tr>
<tr><td>0</td><td>1</td><td>0</td><td>800(RGB)x600 (601~936 disable)</td></tr>
<tr><td>0</td><td>1</td><td>1</td><td>800(RGB)x480 (601~936 disable)</td></tr>
<tr><td>1</td><td>x</td><td>x</td><td>960(RGB)x540 (721~816 disable)</td></tr>
</table></td></tr>
<tr><td>GRB</td><td>I</td><td>Global reset. Keep VDD during operation. Normally pull high.</td></tr>
<tr><td>DCLKPOL</td><td>I</td><td>Define input clock polarity. Normally pull low.
When DCLKPOL=H, latch data by rising edge of CLK.
When DCLKPOL=L, latch data by falling edge of CLK.
In LVDS mode , please connect to L.</td></tr>
<tr><td>DUAL</td><td>I</td><td>Dual gate function enables control. Normally pull high.
DUAL=H, enable dual gate function.
DUAL=L, disable dual gate function.
Note: Cascade function will be disabled under “dual gate” mode!</td></tr>
<tr><td>V1~V14</td><td>I</td><td>When INTERNAL Gamma Table is used. GAMH tied to AVDDG via resistor for PWR_EN=H enable PWM, or tied to AVDD for PWR_EN=L disable PWM.
When using external gamma voltage, GAMH and GAML are floating, and V1~V14 are the external gamma correction points. The voltage of these pins must be:
AGND<V14<V13<V12<V11<V10<V9<V8;
V7<V6<V5<V4<V3<V2<V1< AVDD.</td></tr>
<tr><td>GAMH</td><td>I</td><td>When using INTERNAL Gamma Table, GAMH tied to AVDDG via resistor for PWR_EN=H enable PWM, or tied to AVDD for PWR_EN=L disable PWM. Otherwise floating.</td></tr>
<tr><td>GAML</td><td>I</td><td>When using INTERNAL Gamma Table, tied to GND. Otherwise floating.</td></tr>
<tr><td>STBYB</td><td>I</td><td>Standby mode control. Normally pull High.
When STB=H, all the functions are on. (Default pulls high)
When STB=L, TCON and source driver are off and all output are GND.</td></tr>
<tr><td>MASL</td><td>I</td><td>Master and slave mode selection in cascade mode. Normally pull high.
MASL=H, for Master mode.(Default)
MASL=L, for Slave mode.
Only the Master chip will issue the Gate and Cascade control signal.</td></tr>
<tr><td>MASLOC</td><td>I</td><td>Master location definition pin. Normally pull low.
MASLOC=L, master locate on right side. (Panel top view) (Default)
MASLOC=H, master locate on left side. (Panel top view)</td></tr>
<tr><td>SHLR</td><td>I</td><td>Source Driver internal shift register is controlled by this pin as shown below: Normally pull high.
SHLR=H: SO1→ SO2→ SO3→ • • • →SO1536. (Default)
SHLR=L: SO1536→ SO1535→ SO1534→ • • • →SO1.</td></tr>
</table>

Himax Confidential
Do not Copy

This information contained herein is the exclusive property of Himax and shall not be distributed, reproduced, or disclosed in whole or in part without prior written permission of Himax.

Name	I/O	Description
UPDN	I	Gate Driver Up/down scan setting. Normally pull low. When UPDN=H, reverse scan. STV1 output vertical start pulse and UD pin output “H” to Gate driver When UPDN=L, normal scan. (Default) STV2 output vertical start pulse and UD pin output “L” to Gate driver.
BIST	I	Normal Operation/BIST pattern select. Normally pull low. When BIST=H, BIST.(CLK input is not needed) When BIST=L, Normal Operation. (Default)
NBW	I	Normally black or normally white setting. Normally pull low. When NBW=H, Normally black. When NBW=L, Normally white. (Default)
REV	I	Controls whether the data of D00~D27 are inverted or not. Normally pull low. When REV=H, the data will be inverted. EX. “00”→“3F”, “07”→ “38”, “15”→“2A”, and so on.
FRAME	I	Frame inverse or not select. Normally pull low. When FRAME=H, Uniform. When FRAME=L, Frame inverse. (Default)
SEL[1:0]	I	Gate on sequence select. Normally pull low. SEL[1] / SEL[0] / Pin control function 0 / 0 / Z 0 / 1 / 弓 1 / 0 / Σ 1 / 1 / Z+弓
OEVR/OEVL	O	Gate driver control signal.
SYNC1R/SYNC1L	O	Gate driver control signal. (CABC and BIST sync control)
SYNC2R/SYNC2L	O	Gate driver control signal. (CABC and BIST sync control)
UDR/UDL	O	Gate driver control signal.
CKVR/CKVL	O	Gate driver control signal.
STV1R/STV1L	O	Gate driver control signal.
STV2R/STV2L	O	Gate driver control signal.
STBNR/STBNL	O	Gate driver control signal.
F_CtrlR/F_CtrlL	O	Gate driver control signal. (For special Gate on sequence) In Cascade, let this pin floating. In dual gate, connect the pin to gate driver’s F_Ctrl and setting SEL[1:0]=00.
CABC_EN[1:0]	I	CABC H/W enable pin. Normally pull low. When CABC_EN=”00”, CABC off. (Default mode) When CABC_EN=”01”, user interface Image. When CABC_EN=”10”, still Picture. When CABC_EN=”11”, moving Image.
DIMI	I	Brightness control signal. Normally pull high.
DIMO	O	Backlight dimmer signal for external controller. DIMO=H, Logical control signal to turn on external backlight controller. DIMO=L, Turn off external backlight controller. **Note:** If CABC off, DIMO=DIMI. Else DIMO is controlled by CABC.

Himax Confidential
Do Not Copy

This information contained herein is the exclusive property of Himax and shall not be distributed, reproduced, or disclosed in whole or in part without prior written permission of Himax.

Name	I/O	Description
PINCTL	I	Enable pin control function. Normally pull high. When PINCTL=L, disable pin control function. When PINCTL=H, enable pin control function. **Note**: The related 3-wire control register bit control will be disabled under. PINCTL= H.
OPDRV	I	Source OP driving selection. Normally pull low. OPDRV=H: 140%. OPDRV=L: Normal.
AVDD	PI	Analog power.
AGND	PI	Analog ground.
VDD	PI	Digital power.
GND	PI	Digital ground.
VDD_LVDS	PI	LVDS power.
GND_LVDS	PI	LVDS ground.
AVDDL	PI	Power supply for Half AVDD application. Connected to AVDD when full range. Connected to Half AVDD when Half AVDD application.
AGNDH	PI	Power supply for Half AVDD application. Connected to AGND when full range. Connected to Half AVDD when Half AVDD application.
PWR_EN	I	POWER enable. Normally pull low. PWR_EN=H, enable PWM, charge pump and VCOM buffer. PWR_EN=L, disable PWM, charge pump and VCOM buffer.
FBA	I	PWM controller feedback input. (for AVDD)
DRVA	O	PWM output driver signal for the boost converter. (for AVDD)
FBH	I	PWM controller feedback input. (for VGH)
DRVH	O	PWM output driver signal for the boost converter. (for VGH)
FBL	I	PWM controller feedback input. (for VGL)
DRVL	O	PWM output driver signal for the boost converter. (for VGL)
DRVL_B	O	Inverse of DRVL. (for VGL)
VCOMI	I	VCOM buffer in.
VCOMO	O	VCOM buffer out.
SO1~SO1536	O	Output driver signal.
COM1_IN COM1_OUT	S	Internal link together between input side and output side.
COM2_IN COM2_OUT	S	Internal link together between input side and output side.
TP	T	Test pins. They must be open.
SHIELDING	SH	IC Shielding pads. Those pins are internally connected to the AGND. DO NOT connect to any WOA on the panel.
DASHD	SH	Data Bus Shielding pad. Those pins are internally connected to the GND. RECOMMAND to add shielding lines on the FPC to reduce EMI.
DUM	D	Dummy pads. Those pins are floating pads.

Note: I: Input, **O** : Output, **I/O** : Input/Output, **PI** : Power input, **PO** : Power Output, **T** : Testing, **SH** : Shielding, **D** : Dummy, **S:** Shorted line

Table 4.1: Pad description

Himax Confidential
Do Not Copy

HX8282-A01 passes line description

Pass line no.	Pin name	
1	COM1_IN	COM1_OUT
2	COM2_IN	COM2_OUT

Table 4.2: HX8282-A01 passes line description

Himax Confidential
Do Not Copy

This information contained herein is the exclusive property of Himax and shall not be distributed, reproduced, or disclosed in whole or in part without prior written permission of Himax.

4.2 Value of wiring resistance to each pin

The input wiring resistance values affect power or signal integrity and the display quality. So be sure to design using values that do not exceed those recommendations as below.

Pin name	Wiring resistance value(Ω)
VDD, GND, AVDD, AGND, AVDDG, GND_LVDS	<5
V1~V14	<5
FBA, FBH, FBL	<5
DRVA, DRVH, DRVL, DRVL_B, VDDG	<5
GAMH, GAML	<5
Dx7 ~ Dx0, CLK, CLKN	<5
VCOMI, VCOMO, COM2_IN	<5
SYNC1R/SYNC1L, SYNC2R/SYNC2L	<5
CSB, SDA, SCL	<10
HSD, VSD, DEN	<20
SHIELDING	<50
GRB, STBYB, DITHER, RES, LR, UD, BIST, MODE, EDGSL, DIMO, IFSEL, DIMI, NBW, PINCTL, HFRC, FRAME, SEL0, SEL1, MASL, MASL_OC, CABC_EN0, CABC_EN1, OPDRV, PWR_EN	<100
OEVR, OEVL, UDR, UDL, CKVR, CKVL, STV1R, STV1L, STV2R, STV2L, STBNR, STBNL, F_CtrlR, F_CtrlL	<500

Table 4.3: Wiring resistance values

Himax Confidential
Do Not Copy

This information contained herein is the exclusive property of Himax and shall not be distributed, reproduced, or disclosed in whole or in part without prior written permission of Himax.

5. The BIST Pattern For Aging Mode Test

5.1 The BIST pattern for aging mode test

HX8282-A01 supports BIST pattern for aging mode test automatically. When external BIST pin set to “H” level, then HX8282-A01 will leave normal operation mode and starts to generate the BIST pattern to LCD panel without external clock signal. The BIST pattern is illustrated as below:

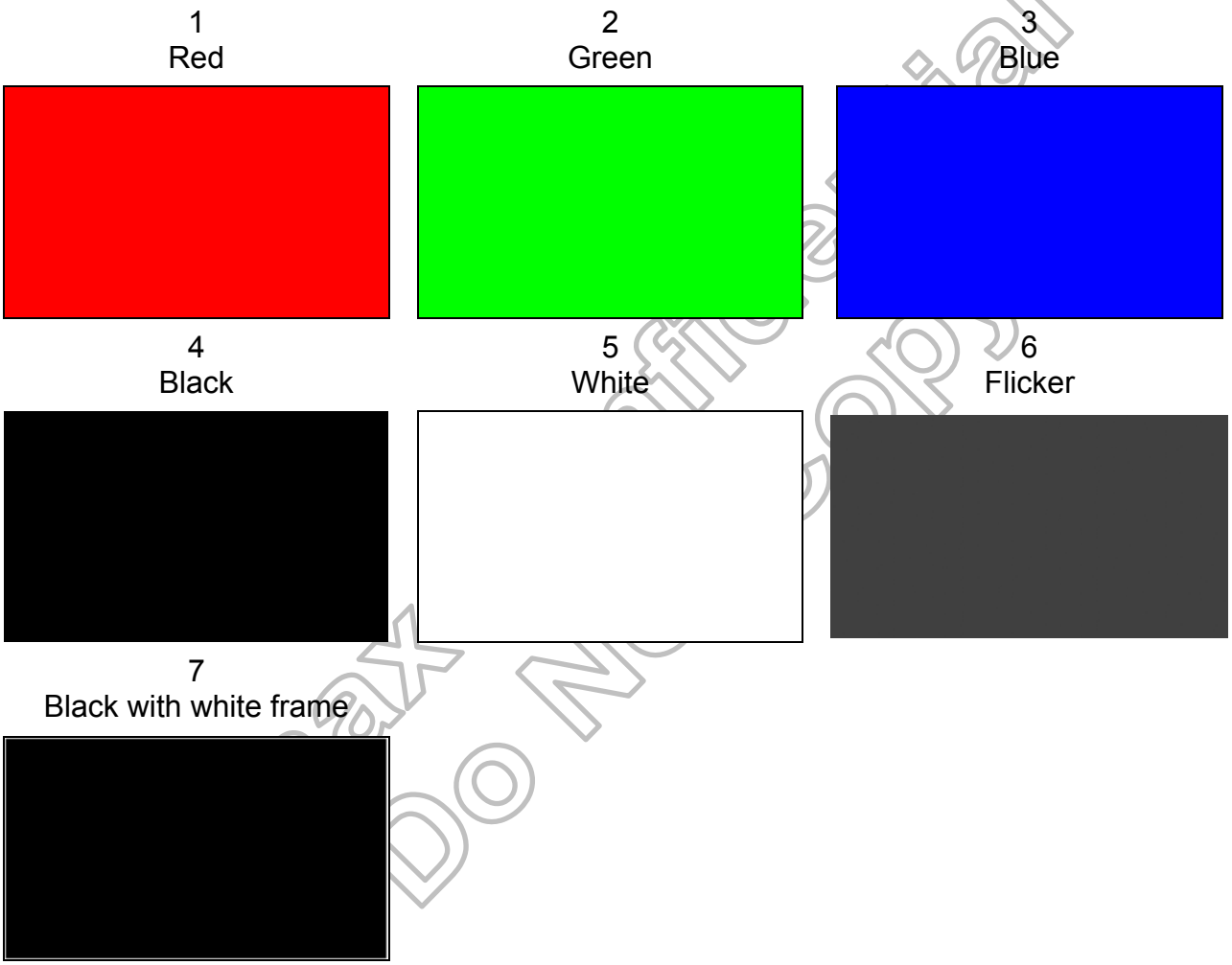

Table 5.1: BIST mode pattern

Himax Confidential
Do Not Copy

6. Gamma Adjustment Function

6.1 Gamma table

The output voltage is determined by the 6-bit digital input data and the 6 γ correction reference voltage.

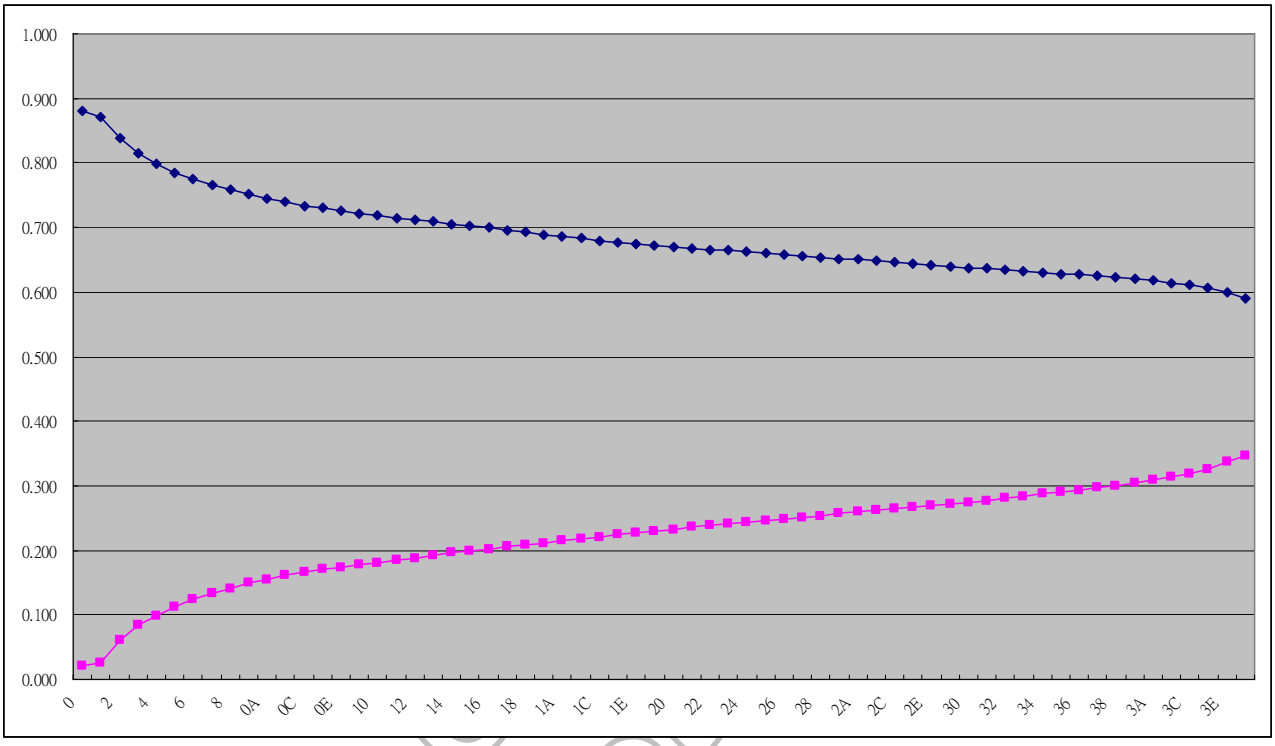

Figure 6.1: Gamma curve

The actual output voltages for all 64 input data at positive and negative polarity is as shown on the following page.

Himax Confidential
Do Not

6.2 Positive polarity and negative polarity

AVDD=9.6V

V1	V2	V3	V4	V5	V6	V7	V8	V9	V10	V11	V12	V13	V14	Unit
8.46	8.36	6.90	6.44	6.13	5.76	5.68	3.33	3.23	2.64	2.23	1.74	0.26	0.21	V

Note: Gamma table vary for each customer.

Positive polarity

Gray Level	Positive Polarity			Gray Level	Positive Polarity		
0	AVDD	X	0.881	20	AVDD	X	0.670
1	AVDD	X	0.871	21	AVDD	X	0.668
2	AVDD	X	0.838	22	AVDD	X	0.666
3	AVDD	X	0.815	23	AVDD	X	0.664
4	AVDD	X	0.799	24	AVDD	X	0.662
5	AVDD	X	0.786	25	AVDD	X	0.660
6	AVDD	X	0.775	26	AVDD	X	0.658
7	AVDD	X	0.766	27	AVDD	X	0.656
8	AVDD	X	0.758	28	AVDD	X	0.654
9	AVDD	X	0.751	29	AVDD	X	0.652
0A	AVDD	X	0.745	2A	AVDD	X	0.650
0B	AVDD	X	0.739	2B	AVDD	X	0.648
0C	AVDD	X	0.734	2C	AVDD	X	0.646
0D	AVDD	X	0.730	2D	AVDD	X	0.644
0E	AVDD	X	0.726	2E	AVDD	X	0.642
0F	AVDD	X	0.722	2F	AVDD	X	0.640
10	AVDD	X	0.718	30	AVDD	X	0.638
11	AVDD	X	0.715	31	AVDD	X	0.636
12	AVDD	X	0.712	32	AVDD	X	0.635
13	AVDD	X	0.709	33	AVDD	X	0.633
14	AVDD	X	0.706	34	AVDD	X	0.631
15	AVDD	X	0.702	35	AVDD	X	0.629
16	AVDD	X	0.699	36	AVDD	X	0.627
17	AVDD	X	0.696	37	AVDD	X	0.625
18	AVDD	X	0.693	38	AVDD	X	0.622
19	AVDD	X	0.690	39	AVDD	X	0.620
1A	AVDD	X	0.686	3A	AVDD	X	0.617
1B	AVDD	X	0.683	3B	AVDD	X	0.615
1C	AVDD	X	0.680	3C	AVDD	X	0.611
1D	AVDD	X	0.678	3D	AVDD	X	0.607
1E	AVDD	X	0.675	3E	AVDD	X	0.600
1F	AVDD	X	0.672	3F	AVDD	X	0.591

Table 6.1: Positive polarity

This information contained herein is the exclusive property of Himax and shall not be distributed, reproduced, or disclosed in whole or in part without prior written permission of Himax.

Negative polarity

Gray Level	Negative Polarity			Gray Level	Negative Polarity		
0	AVDD	X	0.022	20	AVDD	X	0.233
1	AVDD	X	0.027	21	AVDD	X	0.236
2	AVDD	X	0.060	22	AVDD	X	0.238
3	AVDD	X	0.083	23	AVDD	X	0.241
4	AVDD	X	0.099	24	AVDD	X	0.243
5	AVDD	X	0.113	25	AVDD	X	0.246
6	AVDD	X	0.124	26	AVDD	X	0.249
7	AVDD	X	0.134	27	AVDD	X	0.251
8	AVDD	X	0.142	28	AVDD	X	0.254
9	AVDD	X	0.149	29	AVDD	X	0.256
0A	AVDD	X	0.155	2A	AVDD	X	0.259
0B	AVDD	X	0.161	2B	AVDD	X	0.262
0C	AVDD	X	0.166	2C	AVDD	X	0.264
0D	AVDD	X	0.170	2D	AVDD	X	0.267
0E	AVDD	X	0.174	2E	AVDD	X	0.270
0F	AVDD	X	0.177	2F	AVDD	X	0.272
10	AVDD	X	0.181	30	AVDD	X	0.275
11	AVDD	X	0.185	31	AVDD	X	0.277
12	AVDD	X	0.188	32	AVDD	X	0.280
13	AVDD	X	0.192	33	AVDD	X	0.284
14	AVDD	X	0.196	34	AVDD	X	0.287
15	AVDD	X	0.199	35	AVDD	X	0.290
16	AVDD	X	0.203	36	AVDD	X	0.294
17	AVDD	X	0.206	37	AVDD	X	0.297
18	AVDD	X	0.209	38	AVDD	X	0.300
19	AVDD	X	0.212	39	AVDD	X	0.304
1A	AVDD	X	0.215	3A	AVDD	X	0.308
1B	AVDD	X	0.218	3B	AVDD	X	0.313
1C	AVDD	X	0.221	3C	AVDD	X	0.318
1D	AVDD	X	0.224	3D	AVDD	X	0.325
1E	AVDD	X	0.227	3E	AVDD	X	0.337
1F	AVDD	X	0.230	3F	AVDD	X	0.347

Table 6.2: Negative polarity

This information contained herein is the exclusive property of Himax and shall not be distributed, reproduced, or disclosed in whole or in part without prior written permission of Himax.

7. 3-wire Serial Peripheral Interface (SPI)

7.1 SPI format

The HX8282-A01 supports the 3-pin serial peripheral interface (SPI) to set internal register. The data is written to the register of assigned address when “End of transfer” is detected after the 16th SCL rising cycles.

Data is not accepted if there are less or more than 16 cycles for one transaction. Only when SCL is input 16 times and CSB is in the "Low" period simultaneously, SDA is accepted. It needs DCLK input for SDA setting.

The first 6 bits (A5 ~ A0) specify the address of the register. The 7th bit means Read/Write command. “0” is WRITE. “1” is READ. The 8th bit means “Don’t care or Hi-Z“. It is “Don’t care” in write format, and “Hi-Z” in read format. And the last 8 bits are for Data setting (D7 ~D0). The address and data are transferred from the MSB to LSB sequentially. And next cycle is turn-round cycle.

Setting of all the SPI will take effect at the coming falling edge of VSD except GRB and STB bit.

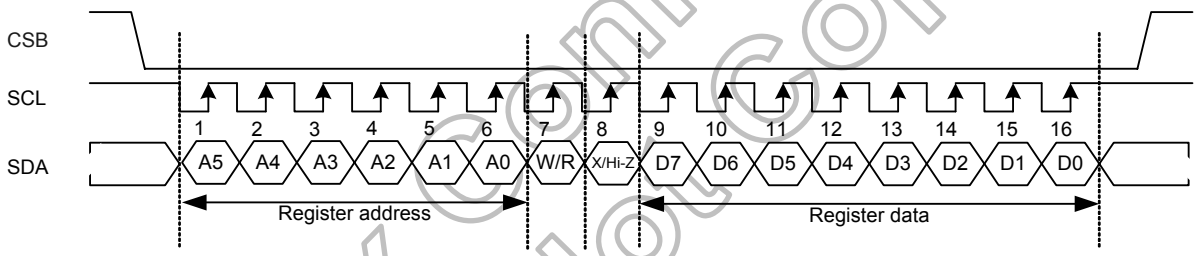

Figure 7.1: SPI format

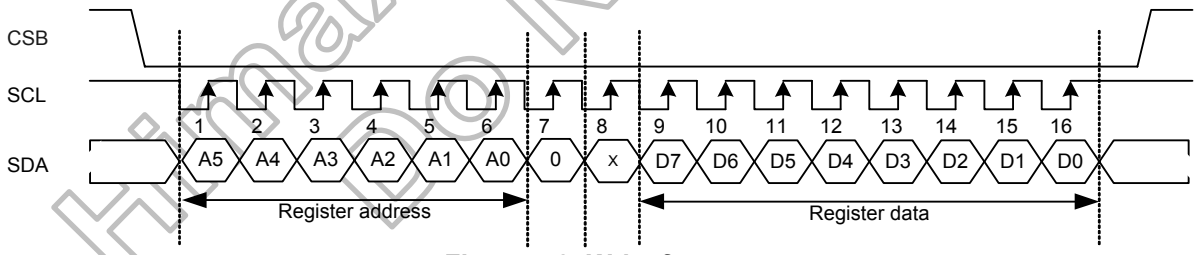

Figure 7.2: Write format

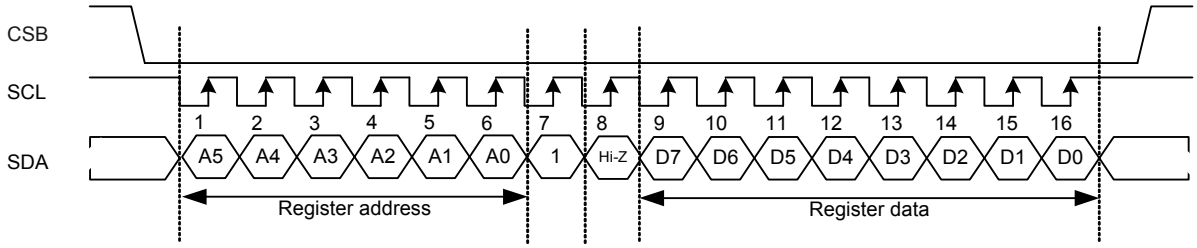

Figure 7.3: Read format

Himax Confidential
Do Not Copy

7.2 SPI register list

		A5	A4	A3	A2	A1	A0	W/R	X/Hi-z	D7	D6	D5	D4	D3	D2	D1	D0
R00	Function control 1	0	0	0	0	0	0	0	X	PWR_EN	-	LR	UD	STB	GRB	CLKPOL	MODE
										0	-	1	0	1	1	0	1
R01	Function control 2	0	0	0	0	0	1	0	X	CABC1	CABC0	HFRC	DIT	BIST	RESL1	RESL0	RESL2
										0	0	0	0	0	0	0	0

Table 7.1: Register map

7.3 Function control 1 (R00h)

Bit	Name	Function	Description
D7	PWR_EN	POWER enable	0: Disable PWM, charge pump and VCOM buffer.(Default) 1: Enable PWM, charge pump and VCOM buffer.
D6	-	-	-
D5	LR	Right/left shift control	0: Right to left 1: Left to Right. (Default)
D4	UD	Up/down scan control	0: Normal. (Default) 1: Up/down reverse.
D3	STB	Standby mode control	0: Standby mode=Stop all circuits except SPI. 1: Normal mode. (Default)
D2	GRB	Global reset	0: Reset mode, all SPI registers return to default values. 1: Normal mode. (Default)
D1	CLKPOL	DCLK polarity change	0: Falling edge latch data. (Default) 1: Rising edge latch data.
D0	MODE	DE/SYNC mode	0: SYNC mode. 1: DE mode. (Default)

Table 7.2: Function control 1 register

7.4 Function control 2 (R01h)

Bit	Name	Function	Description
D7 D6	CABC	CABC operation mode	CABC D7 D6 — CABC state 0 0 — CABC off (Default) 0 1 — UI mode 1 0 — Still mode 1 1 — Moving mode
D5	HFRC	HFRC selection	0: FRC enable. (Default) 1: HFRC enable. If DIT="0", disable dither. (HFRC and FRC disable)
D4	DIT	Dithering function on/off	0: Dithering function disable. (Default) 1: Dithering function enables.
D3	BIST	Normal Operation or BIST pattern select	0: Normal Operation. (Default) 1: BIST pattern.
D2 D1 D0	RESL	Display resolution selection	RESL D2 D1 D0 — Resolution — Note 0 0 0 — 1024(RGB)x600 — Default 0 1 0 — 1024(RGB)x768 — - 1 0 0 — 800 (RGB)x600 — 601~936 channel disable 1 1 0 — 800 (RGB)x480 — 601~936 channel disable x x 1 — 960 (RGB)x540 — -

Table 7.3: Function control 2 register

Himax Confidential
Do Not Copy

8. Power On/Off Sequence

To prevent the device damage from latch up, the power on/off sequence shown below must be followed.

Power on: VDD, GND → AVDD, AGND → V1 to V14
Power off: V1 to V14 → AVDD, AGND→ VDD, GND

8.1 Power on/off control

HX8282-A01 has a power on/off sequence control function. In order to prevent IC from power on reset fail, the rising time (T_{POR}) of the digital power supply VDD should be maintained within the given specifications. Please refer to "AC Characteristics" for more detail on timing.

Himax Confidential
Do Not Copy

This information contained herein is the exclusive property of Himax and shall not be distributed, reproduced, or disclosed in whole or in part without prior written permission of Himax.

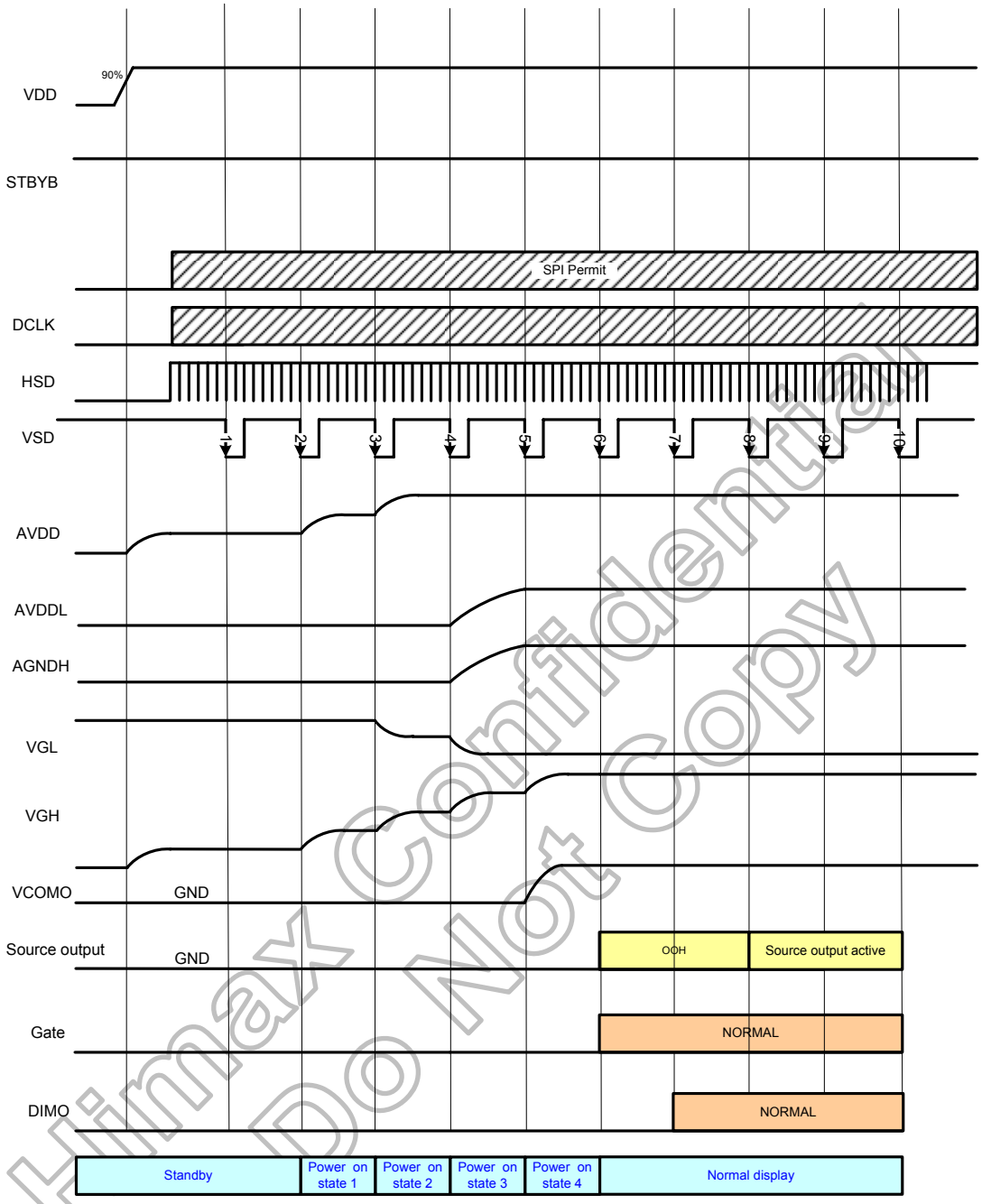

Figure 8.1: Power on timing sequence

Himax Confidential
Do Not Copy

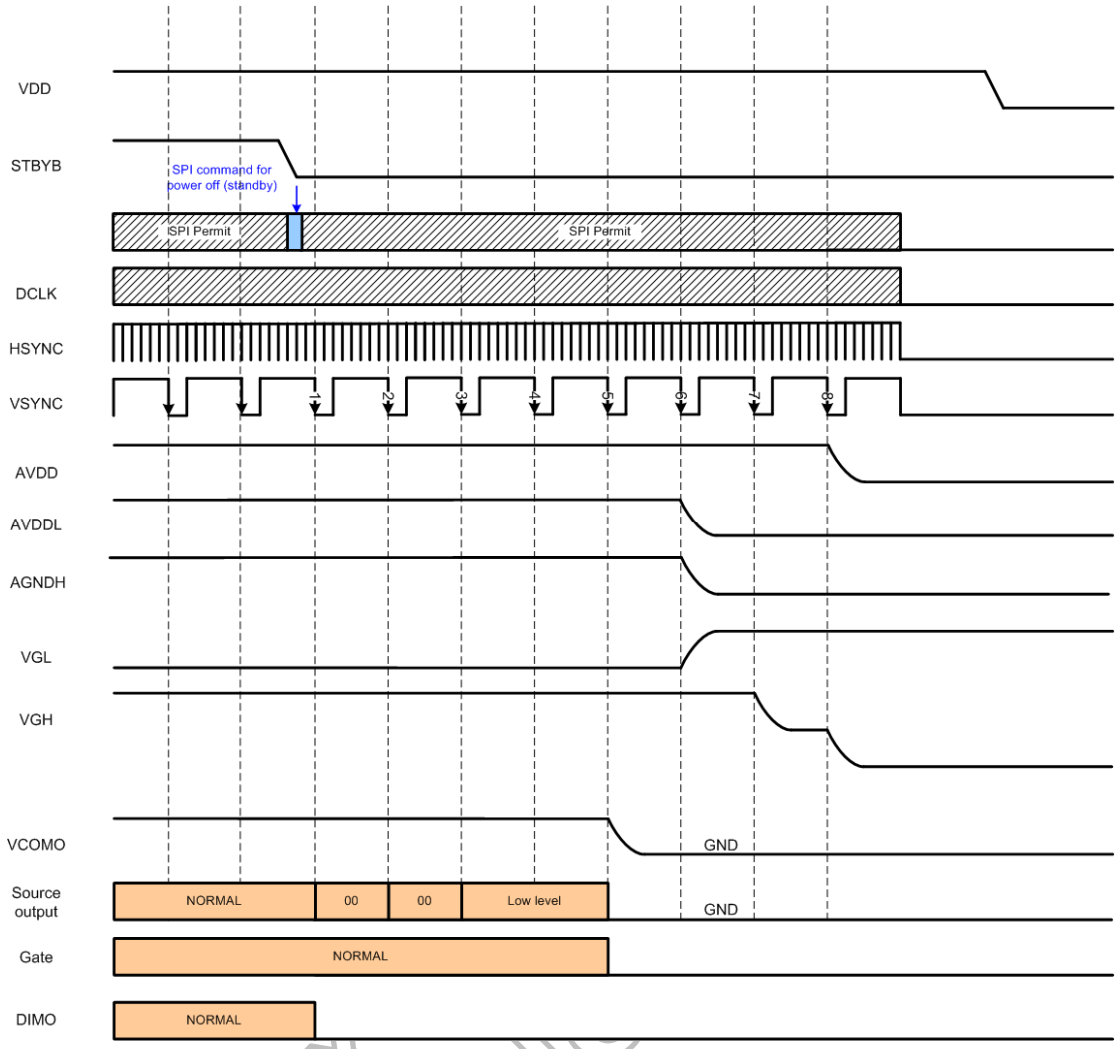

Figure 8.2: Power off timing sequence

Note: Low level=3FH, when NBW=L (Normally white)
Low level=00H, when NBW=H (Normally black)

Himax Do Not

This information contained herein is the exclusive property of Himax and shall not be distributed, reproduced, or disclosed in whole or in part without prior written permission of Himax.

9. DC Characteristics

9.1 Absolute maximum rating (GND=AGND=0V)

Parameter	Symbol	Spec.			Unit
		Min.	Typ.	Max.	
Power supply voltage 1	VDD	-0.5	-	+3.96	V
Power supply voltage 2	AVDD	-0.5	-	+14.85	V
Logic Output Voltage	V_{OUT}	-0.5	-	+5.0	V
Input voltage	V_{IN}	-0.5	-	AVDD+0.5	V
Operation temperature	T_{OPR}	-20	-	+85	℃
Storage temperature	T_{STG}	-55	-	+125	℃

Note: (1) All of the voltages listed above are with respective to GND=0V.
(2) Device is subject to be damaged permanently if stresses beyond those absolute maximum ratings listed above.

Table 9.1: Absolute maximum rating

Himax Confidential
Do Not Copy

9.2 DC electrical characteristics

9.2.1 TTL mode DC electrical characteristics

(VDD=2.3~3.6V, AVDD=6.5~13.5V, GND=AGND=0V, TA=-20℃~+85℃)

Parameter	Symbol	Spec.			Unit	Condition
		Min.	Typ.	Max.		
Power supply voltage	VDD	2.3	-	3.6	V	-
Power supply voltage	AVDD	6.5	-	13.5	V	-
Power supply voltage	AVDDL	6.5	-	13.5	V	Full range application
		-	V8+0.1	-	V	Half AVDD application
Power supply voltage	AGNDH	0			V	Full range application
		-	V7-0.1	-	V	Half AVDD application
Low level input voltage	V_{IL}	0	-	0.3VDD	V	For digital circuit
High level input voltage	V_{IH}	0.7VDD	-	VDD	V	For digital circuit
Output low voltage	V_{OL}	-	-	GND+0.4	V	I_{OL}=400μA
Output high voltage	V_{OH}	VDD-0.4	-	-	V	I_{OH}=-400μA
Pull low/high resistance	R_i	200	250	300	kΩ	For the digital input pin @VDD=3.3V
Input leakage current	Ii	-	-	±1	uA	For digital circuit
Digital Operation current	Idd	-	12	20	mA	Fclk=50MHz, LD=48KHz,VDD=3.3V, No load
Digital stand-by current	Ist1	-	10	50	μA	Clock & all functions are stopped
Analog Operating current	Idda	-	8	10	mA	No load, Fclk=50MHz,LD=48KHz @ AVDD=10V, V1=8V, V14=0.4V
Analog Stand-by current	Ist2	-	10	50	μA	No load, clock & all functions are stopped
Input level of V1~V7	Vref1	0.4AVDD	-	AVDD-0.1	V	Gamma correction voltage input
Input level of V8~V14	Vref2	0.1	-	0.6AVDD	V	Gamma correction voltage input
Output Voltage deviation	Vod1	-	±20	±35	mV	Vo=AGND+0.1V~AGND+0.5V & Vo=AVDD-0.5V~AVDD-0.1V
Output Voltage deviation	Vod2	-	±15	±20	mV	Vo=AGND+0.5V~AVDD-0.5V
Output Voltage Offset between Chips	Voc	-	-	±20	mV	Vo=AGND+0.5V~AVDD-0.5V
Dynamic Range of Output	Vdr	0.1	-	AVDD-0.1	V	SO1~SO1200
Sinking Current of Outputs	IOLy	80	-	-	μA	SO1~SO1200; Vo=0.1V vs. 1.0V, AVDD=13.5V
Driving Current of Outputs	IOHy	80	-	-	μA	SO1~SO1200 ;Vo=0.1V vs. 12.5V, AVDD=13.5V
Resistance of Gamma Table	Rg	0.7*Rn	1.0*Rn	1.3*Rn	Ω	Rn: Internal gamma resistor

Table 9.2: DC electrical characteristics

Himax Confidential
Do Not Copy

9.2.2 LVDS mode DC electrical characteristics

Parameter	Symbol	Spec.			Unit	Condition
		Min.	Typ.	Max.		
Differential input high Threshold voltage	R_{XVTH}	-	-	+0.1	V	R_{XVCM}=1.2V
Differential input low threshold voltage	R_{XVTL}	-0.1	-	-	V	
Input voltage range (singled-end)	R_{XVIN}	0	-	VDD-1.2+ $\|V_{ID}\|/2$	V	-
Differential input common Mode voltage	R_{XVCM}	$\|V_{ID}\|/2$	-	VDD-1.2	V	-
Differential input voltage	$\| V_{ID} \|$	0.2	-	0.6	V	-
Differential input leakage Current	RV_{Xliz}	-10	-	+10	μA	-
LVDS Digital Operating Current	Iddlvds	-	15	30	mA	Fclk=65MHz, VDD=3.3V
LVDS Digital Stand-by Current	Istlvds	-	10	50	μA	Clock & all Functions are stopped

Table 9.3: LVDS mode DC electrical characteristics

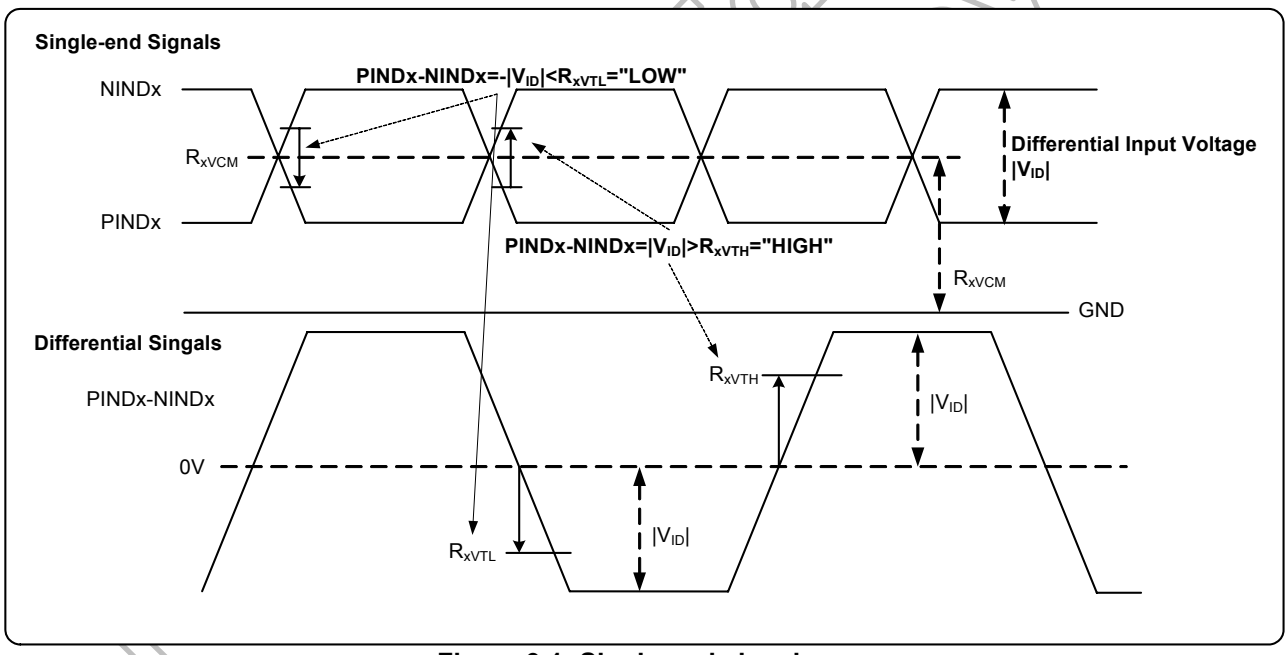

Figure 9.1: Single-end signals

This information contained herein is the exclusive property of Himax and shall not be distributed, reproduced, or disclosed in whole or in part without prior written permission of Himax.

9.2.3 PWM power table

Parameter	Symbol	Spec.			Unit	Condition
		Min.	Typ.	Max.		
Base drive current for PWM	IDRV	-	-	60	mA	DRVA=0.7V
DRV output voltage for PWM	VDRV	0	-	VDD	V	
Feed back voltage for PWM	VFB	1.15	1.2	1.25	V	-
Duty cycle maximum	Dmax	-	-	85	%	-
VCOM buffer input voltage	VCOMI	1	-	AVDD	V	-
VCOM buffer output voltage	VCOMO	VCOMI-0.2	VCOMI	VCOMI+0.2	V	-
VCOM buffer output current	IVCOM	-	-	10	mA	Fclk=65MHz, VDD=3.3V

Table 9.4: Power table

Himax Confidential
Do Not Copy

This information contained herein is the exclusive property of Himax and shall not be distributed, reproduced, or disclosed in whole or in part without prior written permission of Himax.

9.3 Half voltage

Half-voltage source driver can save 50% current by reducing DC current path

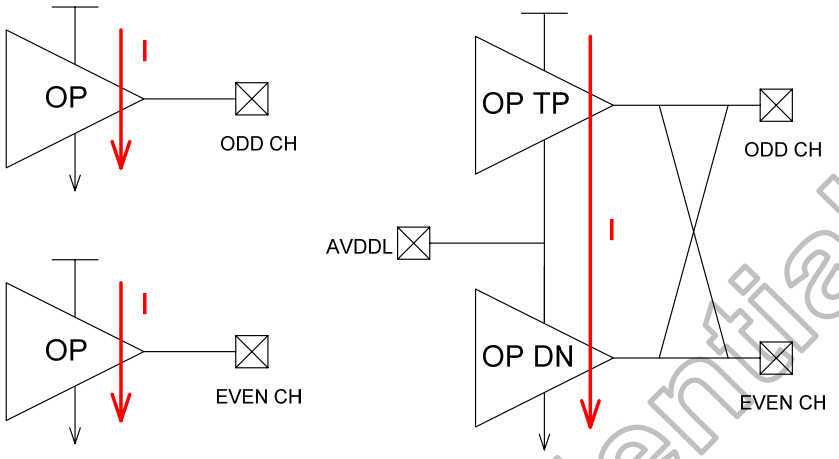

Figure 9.2: Traditional SD and Half-voltage SD

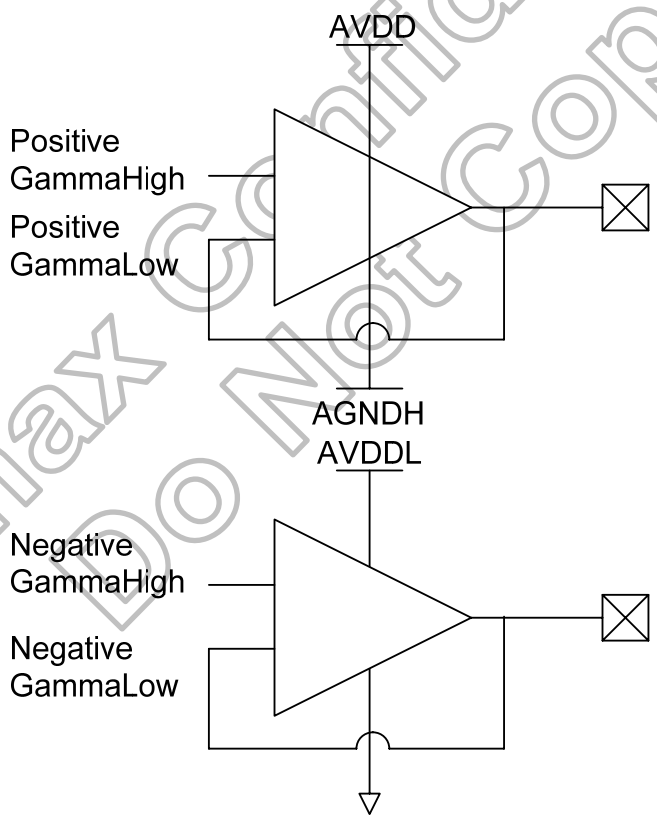

Note: (1) AGNDH: Connected to AGND when Full Range application.
Connected to Half AVDD when Half AVDD application.
(2) AVDDL: Connected to AVDD when Full Range application.
Connected to Half AVDD when Half AVDD application.
(3) Positive Gamma High > AGNDH+0.1.
(4) Negative Gamma High < AVDDL-0.1.

Figure 9.3: Half-voltage SD and gamma voltage relation

Himax Confidential
Do Not Copy

10. AC Characteristics

10.1 AC electrical characteristics

10.1.1 TTL mode AC electrical characteristics

Parameter	Symbol	Spec.			Unit	Condition
		Min.	Typ.	Max.		
VDD Power On Slew rate	T_{POR}	-	-	20	ms	From 0V to 90% VDD
GRB pulse width	T_{Rst}	50	-	-	μs	DCLK=65MHz
DCLK cycle time	T_{cph}	14	-	-	ns	-
DCLK pulse duty	T_{cwh}	40	50	60	%	-
VSD setup time	T_{vst}	5	-	-	ns	-
VSD hold time	T_{vhd}	5	-	-	ns	-
HSD setup time	T_{hst}	5	-	-	ns	-
HSD hold time	T_{hhd}	5	-	-	ns	-
Data set-up time	T_{dsu}	5	-	-	ns	D0[7:0], D1[7:0], D2[7:0] to DCLK
Data hold time	T_{dhd}	5	-	-	ns	D0[7:0], D1[7:0], D2[7:0] to DCLK
DE setup time	T_{esu}	5	-	-	ns	-
DE hold time	T_{ehd}	5	-	-	ns	-
Output stable time	T_{sst}	-	-	6	μs	10% to 90% target voltage. CL=90pF, R=10K ohm (Cascade)
				3		Dual gate

Table 10.1: TTL mode AC electrical characteristics

10.1.2 LVDS mode AC electrical characteristics

Parameter	Symbol	Spec.			Unit	Condition
		Min.	Typ.	Max.		
Clock frequency	R_{XFCLK}	20	-	71	MHz	-
Input data skew margin	T_{RSKM}	500	-	-	pS	$\lvert V_{ID} \rvert$=400mV R_{XVCM}=1.2V R_{XFCLK}=71MHz
Clock high time	T_{LVCH}	-	4/(7* R_{XFCLK})	-	ns	-
Clock low time	T_{LVCL}	-	3/(7* R_{XFCLK})	-	ns	-
PLL wake-up time	T_{emPLL}	-	-	150	μs	-

Table 10.2: LVDS mode AC electrical characteristics

Himax Confidential
Do Not Copy

This information contained herein is the exclusive property of Himax and shall not be distributed, reproduced, or disclosed in whole or in part without prior written permission of Himax.

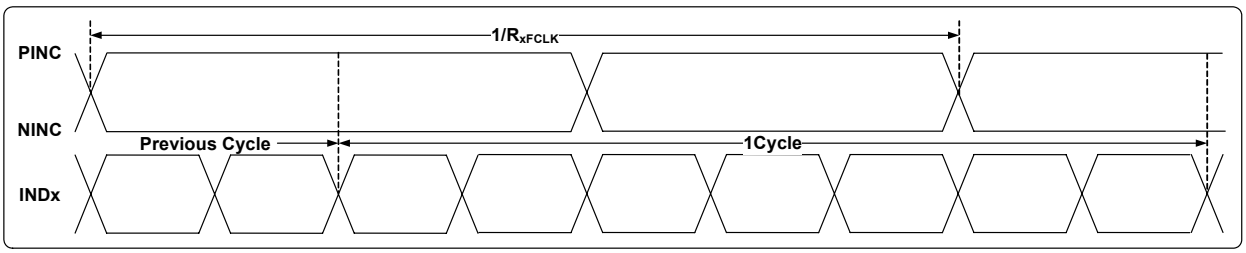

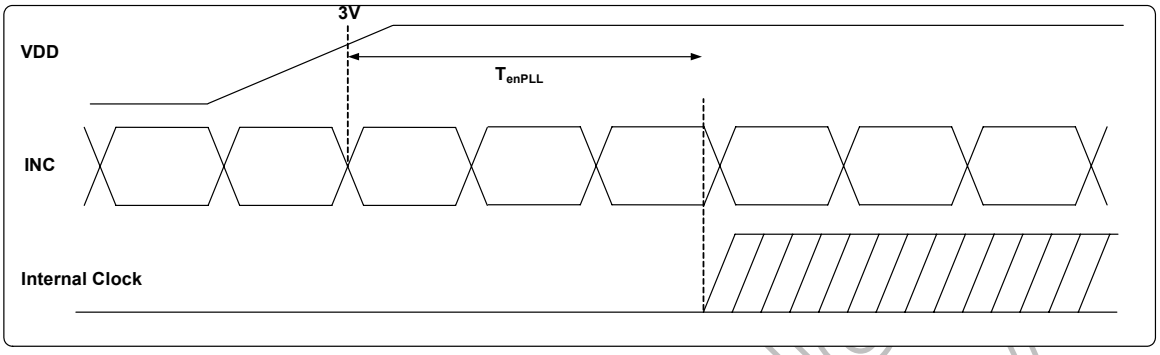

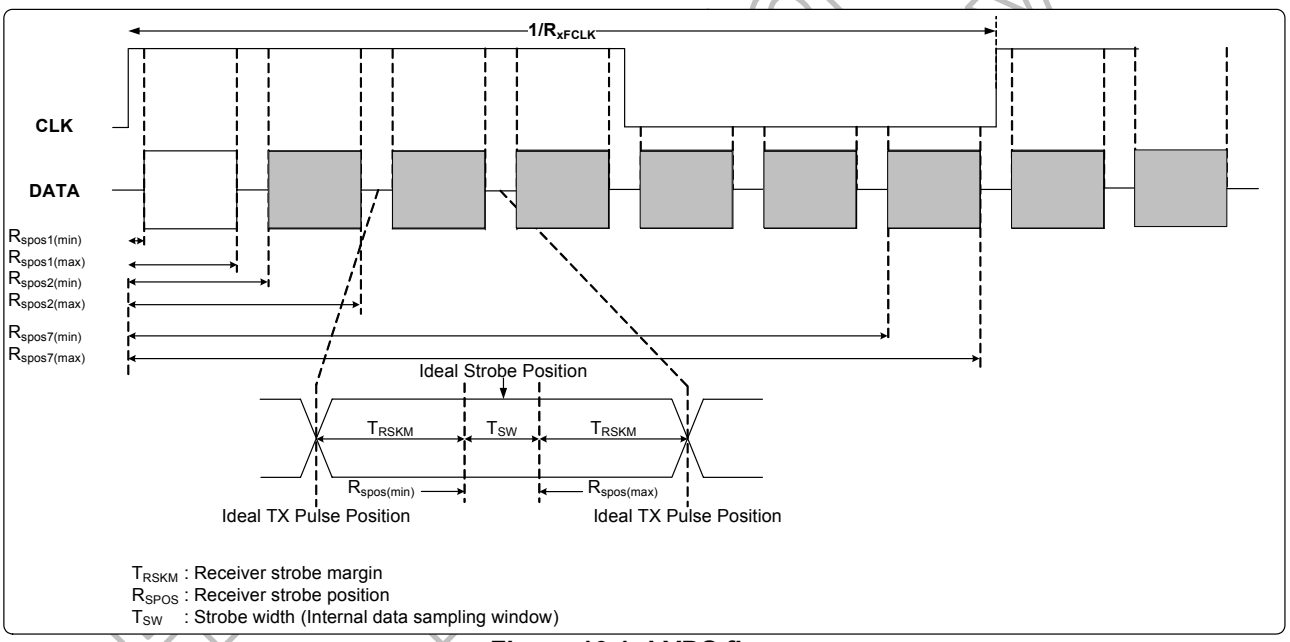

Figure 10.1: LVDS figure

Parameter	Symbol	Spec.			Unit	Condition
		Min.	Typ.	Max.		
Modulation Frequency	SSC_{MF}	23	-	93	KHz	-
Modulation Rate	SSC_{MR}	-	-	±3	%	LVDS clock =71MHz center spread

Table 10.3: SSC table

This information contained herein is the exclusive property of Himax and shall not be distributed, reproduced, or disclosed in whole or in part without prior written permission of Himax.

10.2 Data input format

10.2.1 TTL mode data input format

Vertical timing

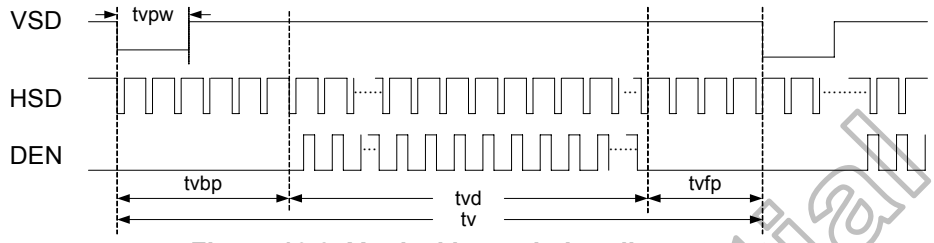

Figure 10.2: Vertical input timing diagram

Horizontal timing

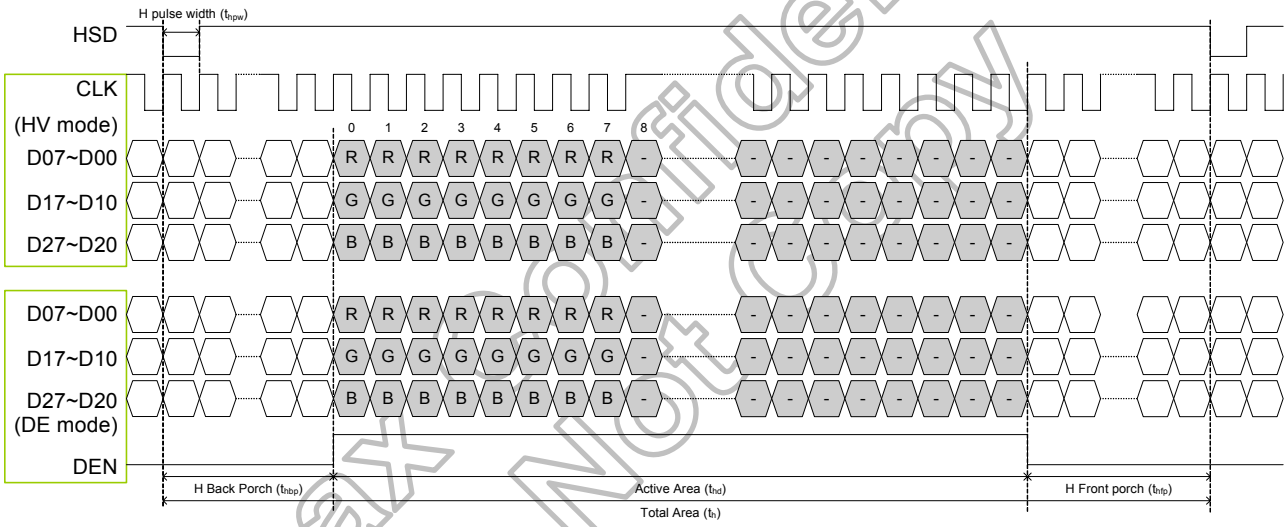

Figure 10.3: Horizontal input timing diagram

Himax Confidential
Do Not Copy

10.2.2 LVDS mode data input format

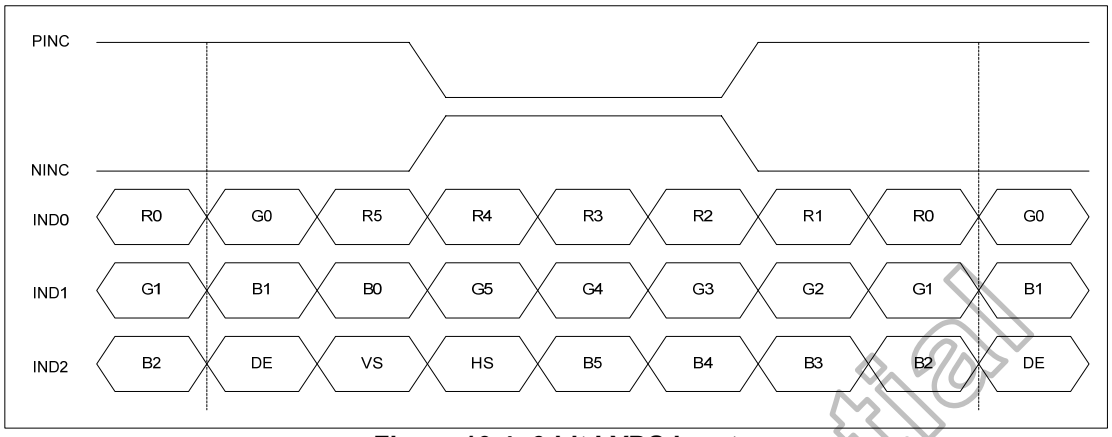

Figure 10.4: 6-bit LVDS input

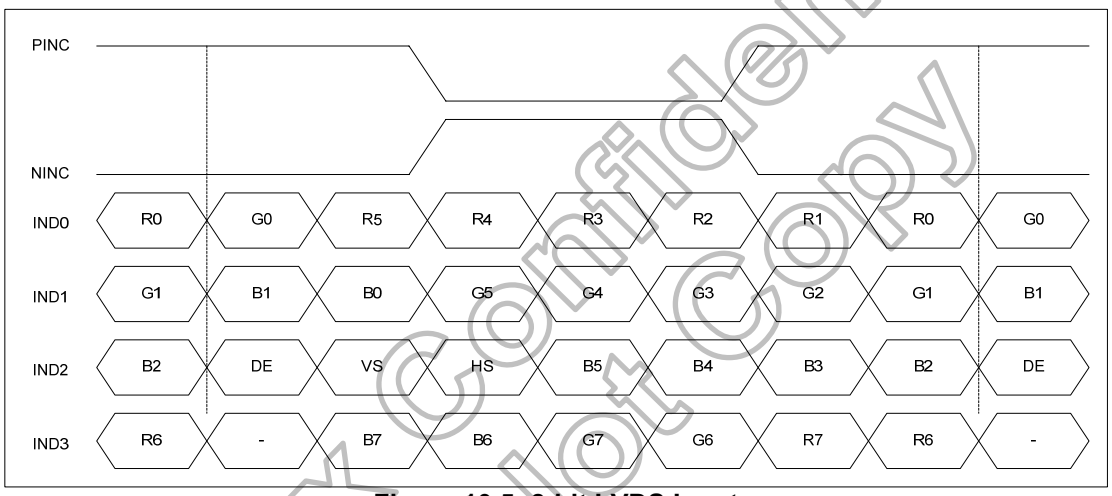

Figure 10.5: 8-bit LVDS Input

Himax Confidential
Do Not Copy

10.3 Parallel RGB input timing table

10.3.1 Resolution：1024x600

- **DE mode**

Parameter	Symbol	Spec.			Unit
		Min.	Typ.	Max.	
DCLK Frequency	fclk	40.8	51.2	67.2	MHz
Horizontal Display Area	thd		1024		DCLK
HSD Period	th	1114	1344	1400	DCLK
HSD Blanking	thb+ thfp	90	320	376	DCLK
Vertical Display Area	tvd		600		T_H
VSD Period	tvbp	610	635	800	T_H
VSD Blanking	tvbp+ tvfp	10	35	200	T_H

Table 10.4: DE mode (1024x600)

- **HV mode**

Horizontal timing

Parameter	Symbol	Spec.			Unit
		Min.	Typ.	Max.	
DCLK Frequency	fclk	44.9	51.2	63	MHz
Horizontal Display Area	thd		1024		DCLK
HSD Period	th	1200	1344	1400	DCLK
HSD Pulse Width	thpw	1	-	140	DCLK
HSD Back Porch	thbp		160		DCLK
HSD Front Porch	thfp	16	160	216	DCLK

Table 10.5: HV mode horizontal timing (1024x600)

Vertical Timing

Parameter	Symbol	Spec.			Unit
		Min.	Typ.	Max.	
Vertical Display Area	tvd		600		T_H
VSD Period	tv	624	635	750	T_H
VSD Pulse Width	tvpw	1	-	20	T_H
VSD Back Porch	tvbp		23		T_H
VSD Front Porch	tvfp	1	12	127	T_H

Table 10.6: HV Mode Vertical Timing (1024x600)

Himax Confidential
Do Not Copy

10.3.2 Resolution：1024x768

- **DE mode**

Parameter	Symbol	Spec.			Unit
		Min.	Typ.	Max.	
DCLK Frequency	fclk	52	65	71	MHz
Horizontal Display Area	thd		1024		DCLK
HSD Period	th	1114	1344	1400	DCLK
HSD Blanking	thb+ thfp	90	320	376	DCLK
Vertical Display Area	tvd		768		T_H
VSD Period	tv	778	806	845	T_H
VSD Blanking	tvbp+ tvfp	10	38	77	T_H

Table 10.7: DE mode (1024x768)

- **HV mode**

Horizontal timing

Parameter	Symbol	Spec.			Unit
		Min.	Typ.	Max.	
DCLK Frequency	fclk	57	65	70.5	MHz
Horizontal Display Area	thd		1024		DCLK
HSD Period	th	1200	1344	1400	DCLK
HSD Pulse Width	thpw	1	-	140	DCLK
HSD Back Porch	thbp		160		DCLK
HSD Front Porch	thfp	16	160	216	DCLK

Table 10.8: HV mode horizontal timing (1024x768)

Vertical timing

Parameter	Symbol	Spec.			Unit
		Min.	Typ.	Max.	
Vertical Display Area	tvd		768		T_H
VSD Period	tv	792	806	840	T_H
VSD Pulse Width	tvpw	1	-	20	T_H
VSD Back Porch	tvbp		23		T_H
VSD Front Porch	tvfp	1	15	49	T_H

Table 10.9: HV mode vertical timing (1024x768)

Himax Confidential
Do Not Copy

This information contained herein is the exclusive property of Himax and shall not be distributed, reproduced, or disclosed in whole or in part without prior written permission of Himax.

10.3.3 Resolution：800x600

- **DE mode**

Parameter	Symbol	Spec.			Unit
		Min.	Typ.	Max.	
DCLK Frequency	fclk	32.6	39.6	62.4	MHz
Horizontal Display Area	thd		800		DCLK
HSD Period	th	890	1000	1300	DCLK
HSD Blanking	thb+ thfp	90	200	500	DCLK
Vertical Display Area	tvd		600		T_H
VSD Period	tv	610	660	800	T_H
VSD Blanking	tvbp+ tvfp	10	60	200	T_H

Table 10.10: DE mode (800x600)

- **HV mode**

Horizontal timing

Parameter	Symbol	Spec.			Unit
		Min.	Typ.	Max.	
DCLK Frequency	fclk	34.5	39.6	50.4	MHz
Horizontal Display Area	thd		800		DCLK
HSD Period	th	900	1000	1200	DCLK
HSD Pulse Width	thpw	1	-	40	DCLK
HSD Back Porch	thbp		88		DCLK
HSD Front Porch	thfp	12	112	312	DCLK

Table 10.11: HV mode horizontal timing (800x600)

Vertical timing

Parameter	Symbol	Spec.			Unit
		Min.	Typ.	Max.	
Vertical Display Area	tvd		600		T_H
VSD Period	tv	640	660	700	T_H
VSD Pulse Width	tvpw	1	-	20	T_H
VSD Back Porch	tvbp		39		T_H
VSD Front Porch	tvfp	1	21	61	T_H

Table 10.12: HV mode vertical timing (800x600)

Himax Confidential
Do Not Copy

This information contained herein is the exclusive property of Himax and shall not be distributed, reproduced, or disclosed in whole or in part without prior written permission of Himax.

10.3.4 Resolution：800 x480

- **DE mode**

Parameter	Symbol	Spec.			Unit
		Min.	Typ.	Max.	
DCLK Frequency	fclk	26.2	29.2	54.6	MHz
Horizontal Display Area	thd		800		DCLK
HSD Period	th	890	928	1300	DCLK
HSD Blanking	thb+ thfp	90	128	500	DCLK
Vertical Display Area	tvd		480		T_H
VSD Period	tv	490	525	700	T_H
VSD Blanking	tvbp+ tvfp	10	45	220	T_H

Table 10.13: DE mode (800x480)

- **HV mode**

Horizontal timing

Parameter	Symbol	Spec.			Unit
		Min.	Typ.	Max.	
DCLK Frequency	fclk	27.7	29.2	39.6	MHz
Horizontal Display Area	thd		800		DCLK
HSD Period	th	900	928	1100	DCLK
HSD Pulse Width	thpw	1	-	40	DCLK
HSD Back Porch	thbp		88		DCLK
HSD Front Porch	thfp	12	40	212	DCLK

Table 10.14: HV mode horizontal timing (800x480)

Vertical timing

Parameter	Symbol	Spec.			Unit
		Min.	Typ.	Max.	
Vertical Display Area	tvd		480		T_H
VSD Period	tv	513	525	600	T_H
VSD Pulse Width	tvpw	1	-	3	T_H
VSD Back Porch	tvbp		32		T_H
VSD Front Porch	tvfp	1	13	88	T_H

Table 10.15: HV mode vertical timing (800x480)

Himax Confidential
Do not Copy

10.3.5 Resolution：960 x540

- **DE mode**

Parameter	Symbol	Spec.			Unit
		Min.	Typ.	Max.	
DCLK Frequency	fclk	36.4	38.6	43.2	MHz
Horizontal Display Area	thd		960		DCLK
HSD Period	th	1060	1100	1200	DCLK
HSD Blanking	thb+ thfp	100	140	240	DCLK
Vertical Display Area	tvd		540		T_H
VSD Period	tv	573	585	600	T_H
VSD Blanking	tvbp+ tvfp	33	45	60	T_H

Table 10.16: DE mode (960x540)

- **HV mode**

Horizontal timing

Parameter	Symbol	Spec.			Unit
		Min.	Typ.	Max.	
DCLK Frequency	fclk	36.4	38.6	43.2	MHz
Horizontal Display Area	thd		960		DCLK
HSD Period	th	1060	1100	1200	DCLK
HSD Pulse Width	thpw	1	-	20	DCLK
HSD Back Porch	thbp		88		DCLK
HSD Front Porch	thfp	12	52	152	DCLK

Table 10.17: HV mode horizontal timing (960x540)

Vertical timing

Parameter	Symbol	Spec.			Unit
		Min.	Typ.	Max.	
Vertical Display Area	tvd		540		T_H
VSD Period	tv	573	585	600	T_H
VSD Pulse Width	tvpw	1	-	3	T_H
VSD Back Porch	tvbp		32		T_H
VSD Front Porch	tvfp	1	13	28	T_H

Table 10.18: HV mode vertical timing (960x540)

Himax Confidential
Do Not Copy

11. Timing

11.1 Output timing table

Parallel 24-bit RGB mode

Parameter	Symbol	Spec.			Unit	Conditions
		Min.	Typ.	Max.		
CLKIN Frequency	Fclk	-	65	71	MHz	VDD=3.0V~3.6V
CLKIN Cycle Time	Tclk	14.1	15.4	-	ns	-
CLKIN Pulse Duty	Tcwh	40	50	60	%	Tclk
Time from HSD to Source Output	Thso		64		CLKIN	-
Time from HSD to LD	Thld		64		CLKIN	-
Time from HSD to STV	Thstv		2		CLKIN	-
Time from HSD to CKV	Thckv		20		CLKIN	-
Time from HSD to OEV	Thoev		4		CLKIN	-
LD Pulse Width	Twld		10		CLKIN	-
CKV Pulse Width	Twckv		66		CLKIN	-
OEV Pulse Width	Twoev		74		CLKIN	-

Table 11.1: Parallel 24-bit RGB mode

Himax Confidential
Do Not Copy

This information contained herein is the exclusive property of Himax and shall not be distributed, reproduced, or disclosed in whole or in part without prior written permission of Himax.

11.2 Timing diagram

11.2.1 Input clock and data timing diagram

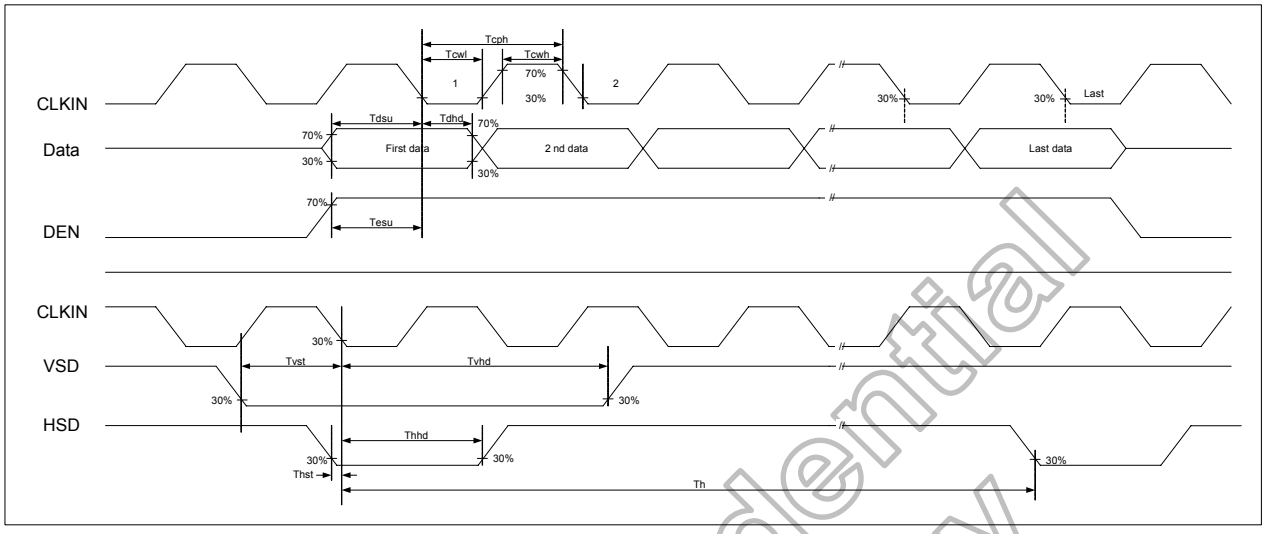

Figure 11.1: Input clock and data timing diagram

11.2.2 Source output timing diagram (Cascade)

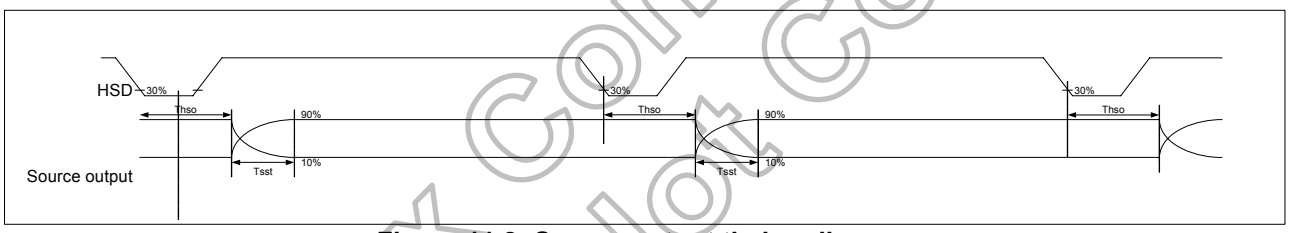

Figure 11.2: Source output timing diagram

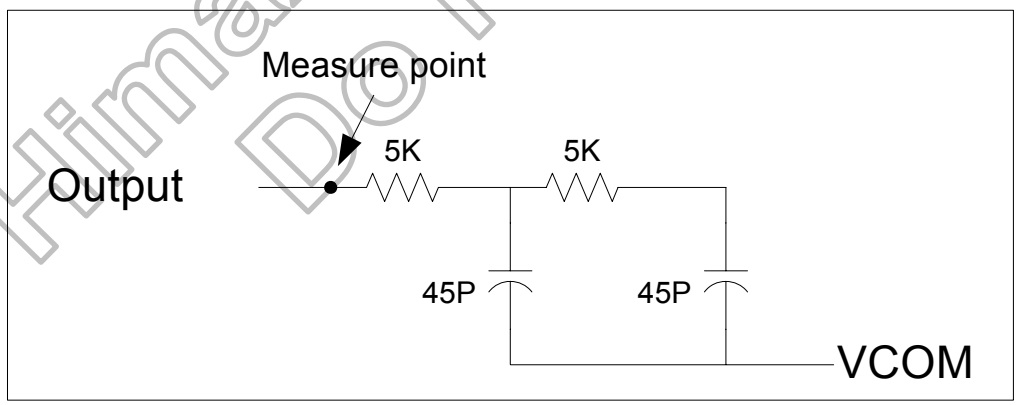

Figure 11.3: Output load condition

Himax Confidential
Do Not Copy

11.2.3 Vertical timing diagram HV (Cascade)

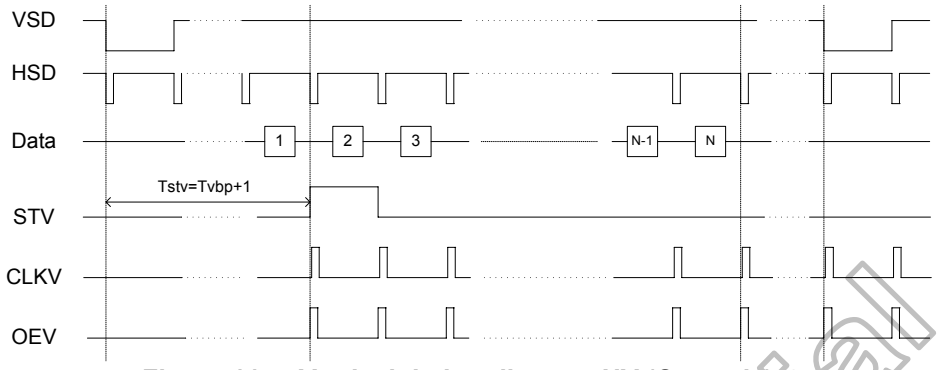

Figure 11.4: Vertical timing diagram HV (Cascade)

11.2.4 Vertical timing diagram DE (Cascade)

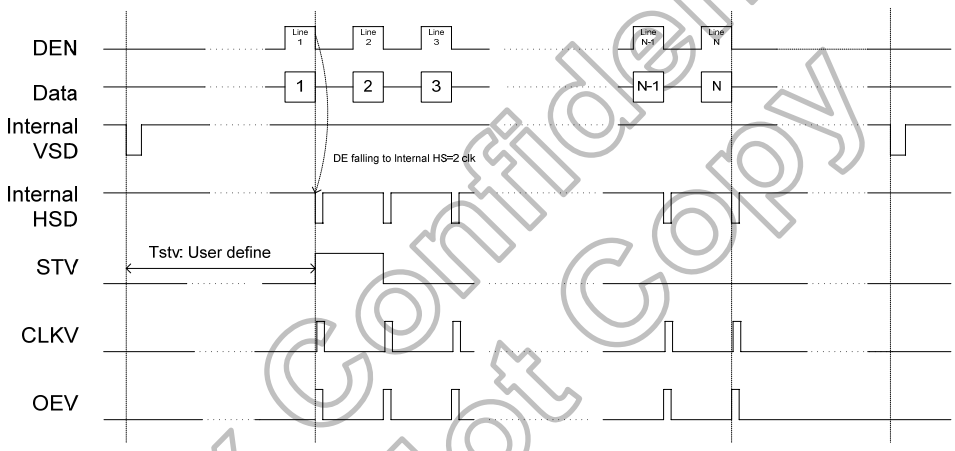

Figure 11.5: Vertical timing diagram DE (Cascade)

11.2.5 Gate output timing diagram (Cascade)

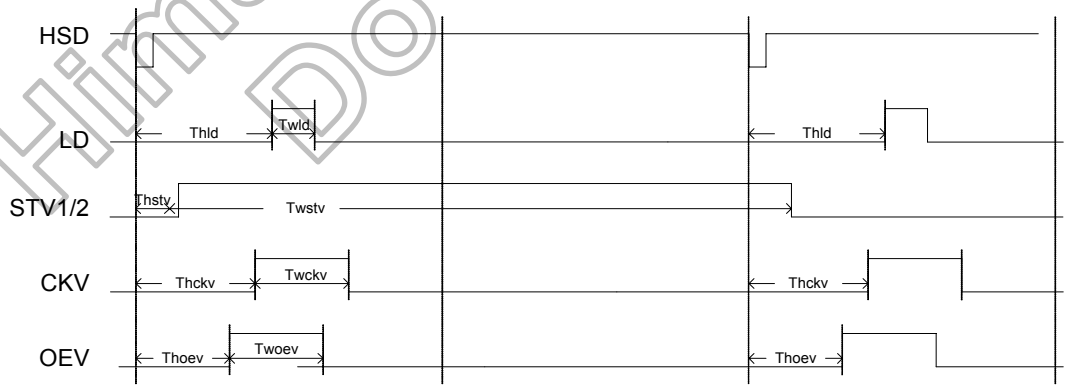

Figure 11.6: Gate output timing diagram (Cascade)

Himax Confidential
Do Not Copy

11.2.6 Vertical timing diagram HV (Dual gate)

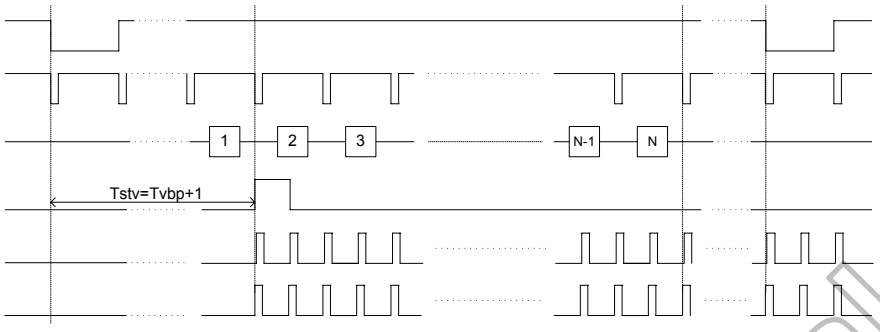

Figure 11.7: Vertical timing diagram HV (Dual gate)

11.2.7 Vertical timing diagram DE (Dual gate)

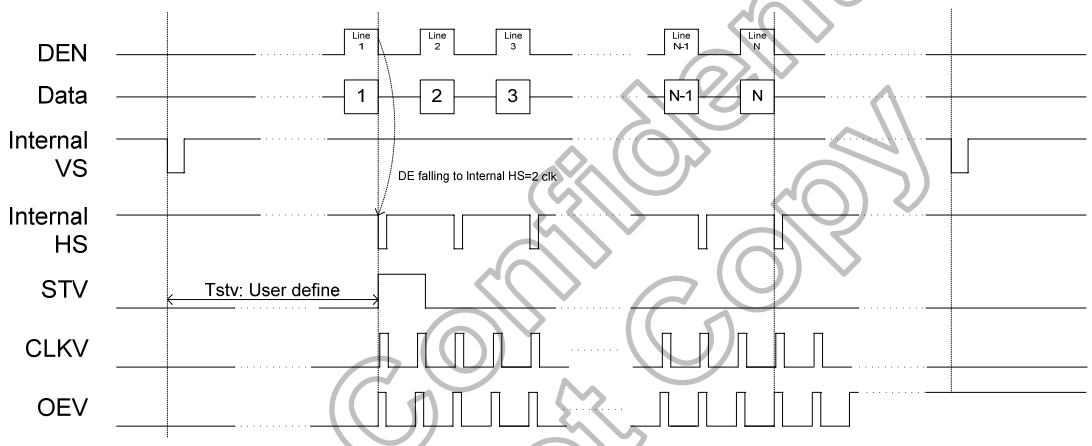

Figure 11.8: Vertical timing diagram DE (Dual gate)

11.2.8 Gate output timing diagram (Dual gate)

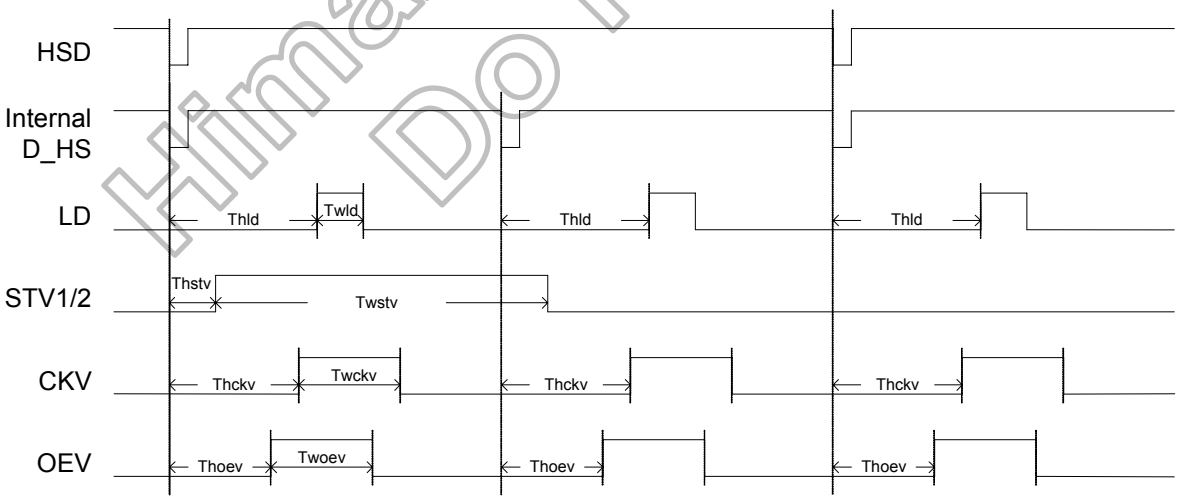

Figure 11.9: Gate output timing diagram (Dual gate)

Himax Confidential
Do Not Copy

11.2.9 SDRRS timing diagram

SDRRS (Seamless Display Refresh Rate Switching)
When showing the still picture, it is accept to reduce the refresh rate from 60Hz to low refresh rate (for example 40Hz). The purpose is mainly for power saving. INTEL defined a timing chart switch between different refresh rates. Following this timing chart, the switch between different refresh rates is seamless for end user.

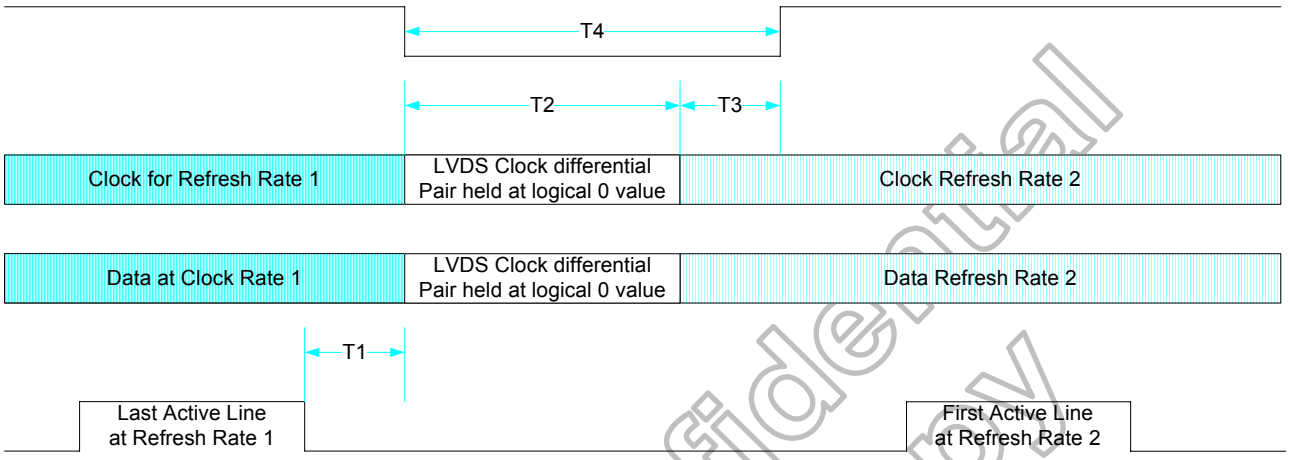

Figure 11.10: SDRRS timing diagram

T1-Min delay from start of vert blank to start of timing change: 2 lines
T2-Max delay for clock to transition to new frequency: 40μs~100μs
T3-Max receiver lock delay from stable clock: 100μs
T4-Max period during which panel maintains display: T2+T3

Himax Confidential
Do Not Copy

12. Pin Assignment (IC Face View)

12.1 PAD sequence

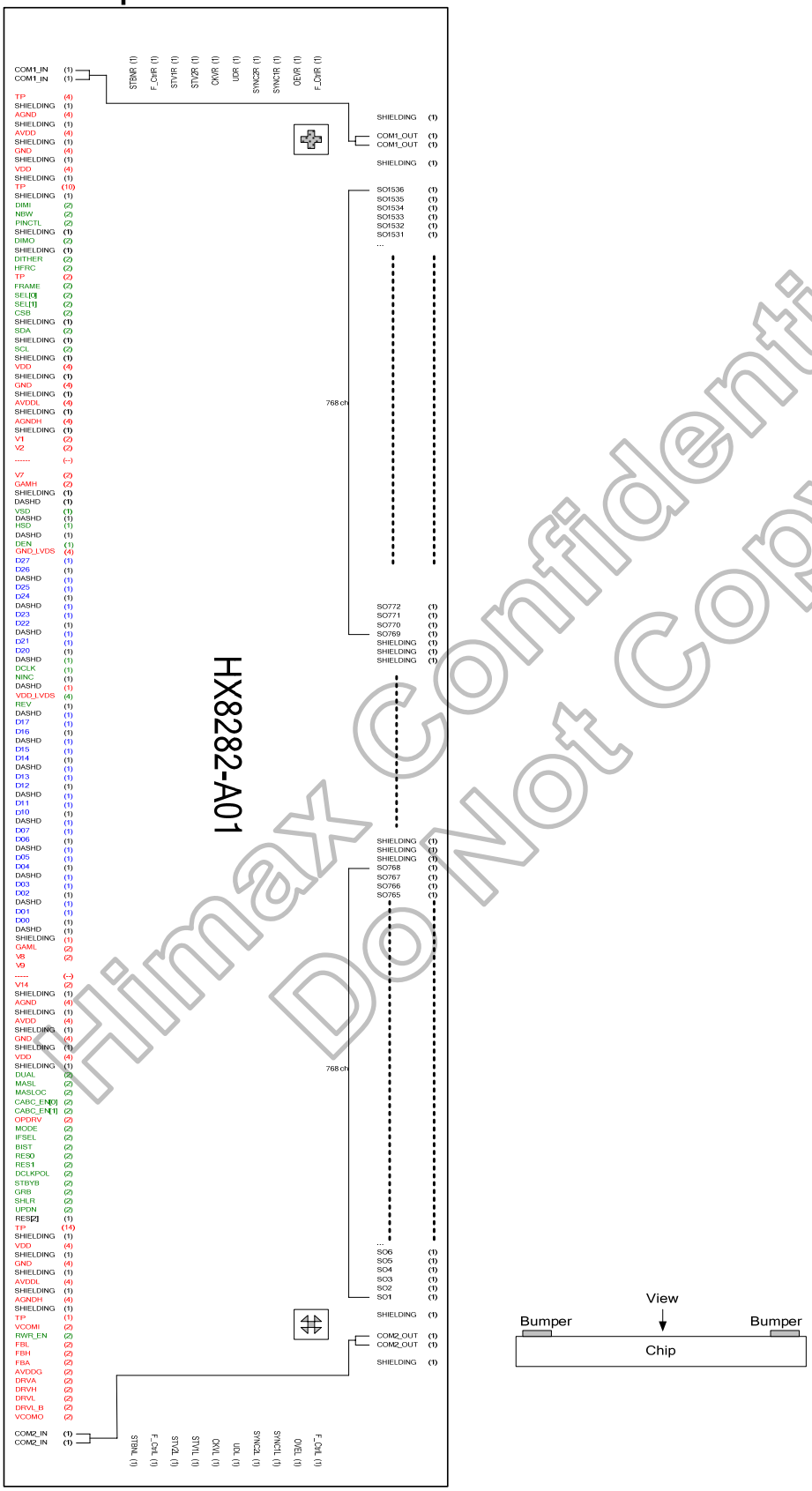

Figure 12.1: Pad sequence

Himax Confidential
Do Not Copy

12.2 Bump information

12.2.1 Chip outline dimensions

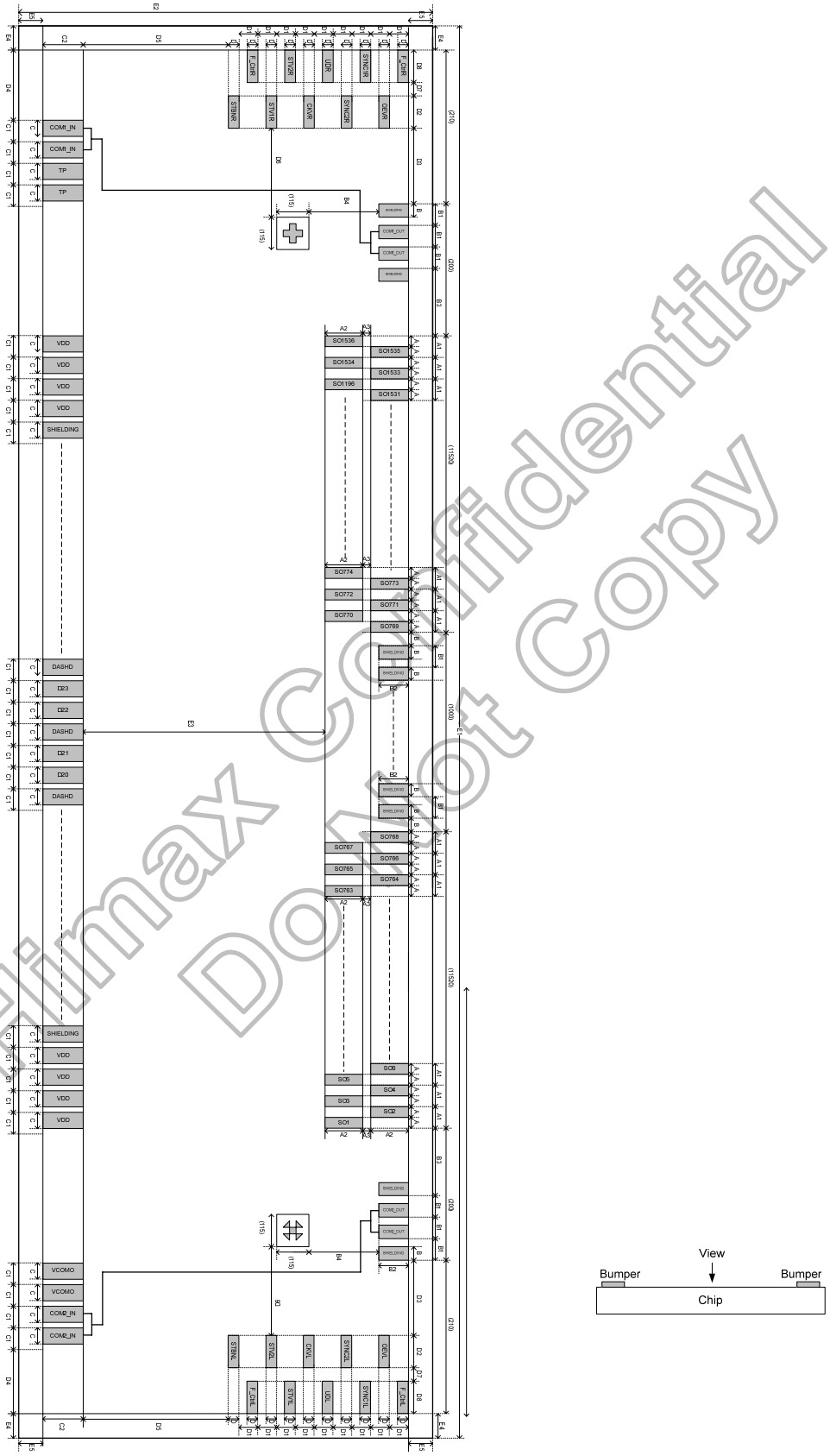

Figure 12.2: Chip outline dimensions

Himax Confidential
Do Not Copy

12.2.2 Alignment mark

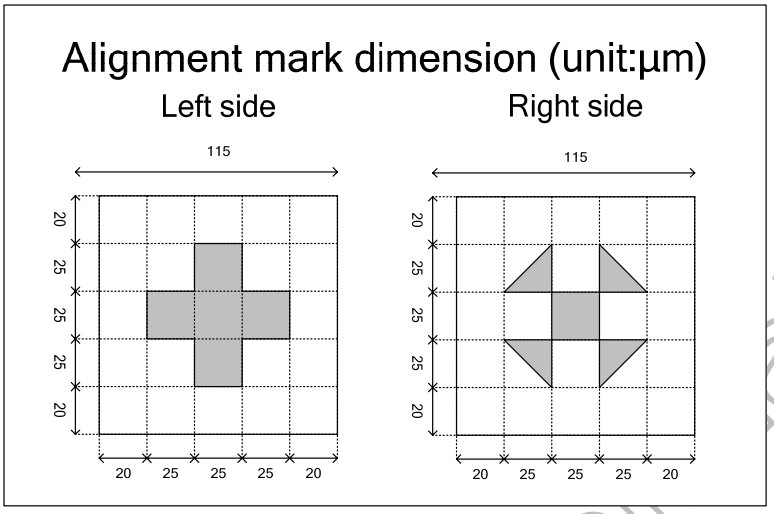

Figure 12.3: Alignment mark

12.2.3 Pad information

Bump Height :12 ± 3.0 um
Co-palanarity within Die :< 2 um
Hardness : 60 ± 15 Hv
Shear Stress :> 4.5 g/mil2

Symbol	Dimension (um)
A	15
A1	30
A2	100
A3	30
B	30
B1	50
B2	70
B3	50
B4	50
C	65
C1	85
C2	100

Symbol	Dimension (um)
D	30
D1	40
D2	80
D3	43
D4	20
D5	96
D6	74
D7	20
D8	67
E1	24876
E2	620
E3	256
E4	8
E5	17

Table 12.1: Pad information

Himax Confidential
Do Not Copy

12.3 Pad coordinates

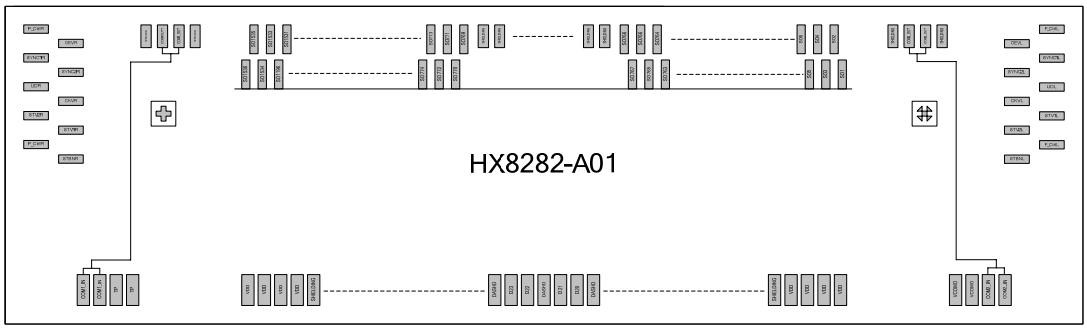

Figure 12.4: Pad coordinate

This information contained herein is the exclusive property of Himax and shall not be distributed, reproduced, or disclosed in whole or in part without prior written permission of Himax.

No.	Name	X	Y	Bump size(um)
1	COM1_IN	-12377.5	-243	65*100
2	COM1_IN	-12292.5	-243	65*100
3	TP	-12207.5	-243	65*100
4	TP	-12122.5	-243	65*100
5	TP	-12037.5	-243	65*100
6	TP	-11952.5	-243	65*100
7	SHIELDING	-11867.5	-243	65*100
8	AGND	-11782.5	-243	65*100
9	AGND	-11697.5	-243	65*100
10	AGND	-11612.5	-243	65*100
11	AGND	-11527.5	-243	65*100
12	SHIELDING	-11442.5	-243	65*100
13	AVDD	-11357.5	-243	65*100
14	AVDD	-11272.5	-243	65*100
15	AVDD	-11187.5	-243	65*100
16	AVDD	-11102.5	-243	65*100
17	SHIELDING	-11017.5	-243	65*100
18	GND	-10932.5	-243	65*100
19	GND	-10847.5	-243	65*100
20	GND	-10762.5	-243	65*100
21	GND	-10677.5	-243	65*100
22	SHIELDING	-10592.5	-243	65*100
23	VDD	-10507.5	-243	65*100
24	VDD	-10422.5	-243	65*100
25	VDD	-10337.5	-243	65*100
26	VDD	-10252.5	-243	65*100
27	SHIELDING	-10167.5	-243	65*100
28	TP	-10082.5	-243	65*100
29	TP	-9997.5	-243	65*100
30	TP	-9912.5	-243	65*100
31	TP	-9827.5	-243	65*100
32	TP	-9742.5	-243	65*100
33	TP	-9657.5	-243	65*100
34	TP	-9572.5	-243	65*100
35	TP	-9487.5	-243	65*100
36	TP	-9402.5	-243	65*100
37	TP	-9317.5	-243	65*100
38	SHIELDING	-9232.5	-243	65*100
39	DIMI	-9147.5	-243	65*100
40	DIMI	-9062.5	-243	65*100
41	NBW	-8977.5	-243	65*100
42	NBW	-8892.5	-243	65*100
43	PINCTL	-8807.5	-243	65*100
44	PINCTL	-8722.5	-243	65*100
45	SHIELDING	-8637.5	-243	65*100
46	DIMO	-8552.5	-243	65*100
47	DIMO	-8467.5	-243	65*100
48	SHIELDING	-8382.5	-243	65*100
49	DITHER	-8297.5	-243	65*100
50	DITHER	-8212.5	-243	65*100

No.	Name	X	Y	Bump size(um)
51	HFRC	-8127.5	-243	65*100
52	HFRC	-8042.5	-243	65*100
53	TP	-7957.5	-243	65*100
54	TP	-7872.5	-243	65*100
55	FRAME	-7787.5	-243	65*100
56	FRAME	-7702.5	-243	65*100
57	SEL[0]	-7617.5	-243	65*100
58	SEL[0]	-7532.5	-243	65*100
59	SEL[1]	-7447.5	-243	65*100
60	SEL[1]	-7362.5	-243	65*100
61	CSB	-7277.5	-243	65*100
62	CSB	-7192.5	-243	65*100
63	SHIELDING	-7107.5	-243	65*100
64	SDA	-7022.5	-243	65*100
65	SDA	-6937.5	-243	65*100
66	SHIELDING	-6852.5	-243	65*100
67	SCL	-6767.5	-243	65*100
68	SCL	-6682.5	-243	65*100
69	SHIELDING	-6597.5	-243	65*100
70	VDD	-6512.5	-243	65*100
71	VDD	-6427.5	-243	65*100
72	VDD	-6342.5	-243	65*100
73	VDD	-6257.5	-243	65*100
74	SHIELDING	-6172.5	-243	65*100
75	GND	-6087.5	-243	65*100
76	GND	-6002.5	-243	65*100
77	GND	-5917.5	-243	65*100
78	GND	-5832.5	-243	65*100
79	SHIELDING	-5747.5	-243	65*100
80	AVDDL	-5662.5	-243	65*100
81	AVDDL	-5577.5	-243	65*100
82	AVDDL	-5492.5	-243	65*100
83	AVDDL	-5407.5	-243	65*100
84	SHIELDING	-5322.5	-243	65*100
85	AGNDH	-5237.5	-243	65*100
86	AGNDH	-5152.5	-243	65*100
87	AGNDH	-5067.5	-243	65*100
88	AGNDH	-4982.5	-243	65*100
89	SHIELDING	-4897.5	-243	65*100
90	V1	-4812.5	-243	65*100
91	V1	-4727.5	-243	65*100
92	V2	-4642.5	-243	65*100
93	V2	-4557.5	-243	65*100
94	V3	-4472.5	-243	65*100
95	V3	-4387.5	-243	65*100
96	V4	-4302.5	-243	65*100
97	V4	-4217.5	-243	65*100
98	V5	-4132.5	-243	65*100
99	V5	-4047.5	-243	65*100
100	V6	-3962.5	-243	65*100

Himax Confidential
Do Not Copy

This information contained herein is the exclusive property of Himax and shall not be distributed, reproduced, or disclosed in whole or in part without prior written permission of Himax.

No.	Name	X	Y	Bump size(um)
101	V6	-3877.5	-243	65*100
102	V7	-3792.5	-243	65*100
103	V7	-3707.5	-243	65*100
104	GAMH	-3622.5	-243	65*100
105	GAMH	-3537.5	-243	65*100
106	SHIELDING	-3452.5	-243	65*100
107	DASHD	-3367.5	-243	65*100
108	VSD	-3282.5	-243	65*100
109	DASHD	-3197.5	-243	65*100
110	HSD	-3112.5	-243	65*100
111	DASHD	-3027.5	-243	65*100
112	DEN	-2942.5	-243	65*100
113	GND_LVDS	-2857.5	-243	65*100
114	GND_LVDS	-2772.5	-243	65*100
115	GND_LVDS	-2687.5	-243	65*100
116	GND_LVDS	-2602.5	-243	65*100
117	D27	-2517.5	-243	65*100
118	D26	-2432.5	-243	65*100
119	DASHD	-2347.5	-243	65*100
120	D25	-2262.5	-243	65*100
121	D24	-2177.5	-243	65*100
122	DASHD	-2092.5	-243	65*100
123	D23	-2007.5	-243	65*100
124	D22	-1922.5	-243	65*100
125	DASHD	-1837.5	-243	65*100
126	D21	-1752.5	-243	65*100
127	D20	-1667.5	-243	65*100
128	DASHD	-1582.5	-243	65*100
129	DCLK	-1497.5	-243	65*100
130	NINC	-1412.5	-243	65*100
131	DASHD	-1327.5	-243	65*100
132	VDD_LVDS	-1242.5	-243	65*100
133	VDD_LVDS	-1157.5	-243	65*100
134	VDD_LVDS	-1072.5	-243	65*100
135	VDD_LVDS	-987.5	-243	65*100
136	REV	-902.5	-243	65*100
137	DASHD	-817.5	-243	65*100
138	D17	-732.5	-243	65*100
139	D16	-647.5	-243	65*100
140	DASHD	-562.5	-243	65*100
141	D15	-477.5	-243	65*100
142	D14	-392.5	-243	65*100
143	DASHD	-307.5	-243	65*100
144	D13	-222.5	-243	65*100
145	D12	-137.5	-243	65*100
146	DASHD	-52.5	-243	65*100
147	D11	32.5	-243	65*100
148	D10	117.5	-243	65*100
149	DASHD	202.5	-243	65*100
150	D07	287.5	-243	65*100

No.	Name	X	Y	Bump size(um)
151	D06	372.5	-243	65*100
152	DASHD	457.5	-243	65*100
153	D05	542.5	-243	65*100
154	D04	627.5	-243	65*100
155	DASHD	712.5	-243	65*100
156	D03	797.5	-243	65*100
157	D02	882.5	-243	65*100
158	DASHD	967.5	-243	65*100
159	D01	1052.5	-243	65*100
160	D00	1137.5	-243	65*100
161	DASHD	1222.5	-243	65*100
162	SHIELDING	1307.5	-243	65*100
163	GAML	1392.5	-243	65*100
164	GAML	1477.5	-243	65*100
165	V8	1562.5	-243	65*100
166	V8	1647.5	-243	65*100
167	V9	1732.5	-243	65*100
168	V9	1817.5	-243	65*100
169	V10	1902.5	-243	65*100
170	V10	1987.5	-243	65*100
171	V11	2072.5	-243	65*100
172	V11	2157.5	-243	65*100
173	V12	2242.5	-243	65*100
174	V12	2327.5	-243	65*100
175	V13	2412.5	-243	65*100
176	V13	2497.5	-243	65*100
177	V14	2582.5	-243	65*100
178	V14	2667.5	-243	65*100
179	SHIELDING	2752.5	-243	65*100
180	AGND	2837.5	-243	65*100
181	AGND	2922.5	-243	65*100
182	AGND	3007.5	-243	65*100
183	AGND	3092.5	-243	65*100
184	SHIELDING	3177.5	-243	65*100
185	AVDD	3262.5	-243	65*100
186	AVDD	3347.5	-243	65*100
187	AVDD	3432.5	-243	65*100
188	AVDD	3517.5	-243	65*100
189	SHIELDING	3602.5	-243	65*100
190	GND	3687.5	-243	65*100
191	GND	3772.5	-243	65*100
192	GND	3857.5	-243	65*100
193	GND	3942.5	-243	65*100
194	SHIELDING	4027.5	-243	65*100
195	VDD	4112.5	-243	65*100
196	VDD	4197.5	-243	65*100
197	VDD	4282.5	-243	65*100
198	VDD	4367.5	-243	65*100
199	SHIELDING	4452.5	-243	65*100
200	DUAL	4537.5	-243	65*100

Himax Confidential
Do Not Copy

No.	Name	X	Y	Bump size(um)
201	DUAL	4622.5	-243	65*100
202	MASL	4707.5	-243	65*100
203	MASL	4792.5	-243	65*100
204	MASLOC	4877.5	-243	65*100
205	MASLOC	4962.5	-243	65*100
206	CABC_EN[0]	5047.5	-243	65*100
207	CABC_EN[0]	5132.5	-243	65*100
208	CABC_EN[1]	5217.5	-243	65*100
209	CABC_EN[1]	5302.5	-243	65*100
210	OPDRV	5387.5	-243	65*100
211	OPDRV	5472.5	-243	65*100
212	MODE	5557.5	-243	65*100
213	MODE	5642.5	-243	65*100
214	IFSEL	5727.5	-243	65*100
215	IFSEL	5812.5	-243	65*100
216	BIST	5897.5	-243	65*100
217	BIST	5982.5	-243	65*100
218	RES[0]	6067.5	-243	65*100
219	RES[0]	6152.5	-243	65*100
220	RES[1]	6237.5	-243	65*100
221	RES[1]	6322.5	-243	65*100
222	DCLKPOL	6407.5	-243	65*100
223	DCLKPOL	6492.5	-243	65*100
224	STBYB	6577.5	-243	65*100
225	STBYB	6662.5	-243	65*100
226	GRB	6747.5	-243	65*100
227	GRB	6832.5	-243	65*100
228	SHLR	6917.5	-243	65*100
229	SHLR	7002.5	-243	65*100
230	UPDN	7087.5	-243	65*100
231	UPDN	7172.5	-243	65*100
232	RES[2]	7257.5	-243	65*100
233	TP	7342.5	-243	65*100
234	TP	7427.5	-243	65*100
235	TP	7512.5	-243	65*100
236	TP	7597.5	-243	65*100
237	TP	7682.5	-243	65*100
238	TP	7767.5	-243	65*100
239	TP	7852.5	-243	65*100
240	TP	7937.5	-243	65*100
241	TP	8022.5	-243	65*100
242	TP	8107.5	-243	65*100
243	TP	8192.5	-243	65*100
244	TP	8277.5	-243	65*100
245	TP	8362.5	-243	65*100
246	TP	8447.5	-243	65*100
247	SHIELDING	8532.5	-243	65*100
248	VDD	8617.5	-243	65*100
249	VDD	8702.5	-243	65*100
250	VDD	8787.5	-243	65*100

No.	Name	X	Y	Bump size(um)
251	VDD	8872.5	-243	65*100
252	SHIELDING	8957.5	-243	65*100
253	GND	9042.5	-243	65*100
254	GND	9127.5	-243	65*100
255	GND	9212.5	-243	65*100
256	GND	9297.5	-243	65*100
257	SHIELDING	9382.5	-243	65*100
258	AVDDL	9467.5	-243	65*100
259	AVDDL	9552.5	-243	65*100
260	AVDDL	9637.5	-243	65*100
261	AVDDL	9722.5	-243	65*100
262	SHIELDING	9807.5	-243	65*100
263	AGNDH	9892.5	-243	65*100
264	AGNDH	9977.5	-243	65*100
265	AGNDH	10062.5	-243	65*100
266	AGNDH	10147.5	-243	65*100
267	SHIELDING	10232.5	-243	65*100
268	TP	10317.5	-243	65*100
269	VCOMI	10402.5	-243	65*100
270	VCOMI	10487.5	-243	65*100
271	PWR_EN	10572.5	-243	65*100
272	PWR_EN	10657.5	-243	65*100
273	FBL	10742.5	-243	65*100
274	FBL	10827.5	-243	65*100
275	FBH	10912.5	-243	65*100
276	FBH	10997.5	-243	65*100
277	FBA	11082.5	-243	65*100
278	FBA	11167.5	-243	65*100
279	AVDDG	11252.5	-243	65*100
280	AVDDG	11337.5	-243	65*100
281	DRVA	11422.5	-243	65*100
282	DRVA	11507.5	-243	65*100
283	DRVH	11592.5	-243	65*100
284	DRVH	11677.5	-243	65*100
285	DRVL	11762.5	-243	65*100
286	DRVL	11847.5	-243	65*100
287	DRVL_B	11932.5	-243	65*100
288	DRVL_B	12017.5	-243	65*100
289	VCOMO	12102.5	-243	65*100
290	VCOMO	12187.5	-243	65*100
291	COM2_IN	12272.5	-243	65*100
292	COM2_IN	12357.5	-243	65*100
293	STBNL	12303	-82	80*30
294	F_CtrlL	12396.5	-42	67*30
295	STV2L	12303	-2	80*30
296	STV1L	12396.5	38	67*30
297	CKVL	12303	78	80*30
298	UDL	12396.5	118	67*30
299	SYN2L	12303	158	80*30
300	SYN1L	12396.5	198	67*30

Himax Confidential Do Not Copy

No.	Name	X	Y	Bump size(um)
301	F_CtrlL	12396.5	278	67*30
302	OEVL	12303	238	80*30
303	SHIELDING	12205	258	30*70
304	COM2_OUT	12155	258	30*70
305	COM2_OUT	12105	258	30*70
306	SHIELDING	12055	258	30*70
307	SO1	12012.5	113	15*100
308	SO2	11997.5	243	15*100
309	SO3	11982.5	113	15*100
310	SO4	11967.5	243	15*100
311	SO5	11952.5	113	15*100
312	SO6	11937.5	243	15*100
313	SO7	11922.5	113	15*100
314	SO8	11907.5	243	15*100
315	SO9	11892.5	113	15*100
316	SO10	11877.5	243	15*100
317	SO11	11862.5	113	15*100
318	SO12	11847.5	243	15*100
319	SO13	11832.5	113	15*100
320	SO14	11817.5	243	15*100
321	SO15	11802.5	113	15*100
322	SO16	11787.5	243	15*100
323	SO17	11772.5	113	15*100
324	SO18	11757.5	243	15*100
325	SO19	11742.5	113	15*100
326	SO20	11727.5	243	15*100
327	SO21	11712.5	113	15*100
328	SO22	11697.5	243	15*100
329	SO23	11682.5	113	15*100
330	SO24	11667.5	243	15*100
331	SO25	11652.5	113	15*100
332	SO26	11637.5	243	15*100
333	SO27	11622.5	113	15*100
334	SO28	11607.5	243	15*100
335	SO29	11592.5	113	15*100
336	SO30	11577.5	243	15*100
337	SO31	11562.5	113	15*100
338	SO32	11547.5	243	15*100
339	SO33	11532.5	113	15*100
340	SO34	11517.5	243	15*100
341	SO35	11502.5	113	15*100
342	SO36	11487.5	243	15*100
343	SO37	11472.5	113	15*100
344	SO38	11457.5	243	15*100
345	SO39	11442.5	113	15*100
346	SO40	11427.5	243	15*100
347	SO41	11412.5	113	15*100
348	SO42	11397.5	243	15*100
349	SO43	11382.5	113	15*100
350	SO44	11367.5	243	15*100

No.	Name	X	Y	Bump size(um)
351	SO45	11352.5	113	15*100
352	SO46	11337.5	243	15*100
353	SO47	11322.5	113	15*100
354	SO48	11307.5	243	15*100
355	SO49	11292.5	113	15*100
356	SO50	11277.5	243	15*100
357	SO51	11262.5	113	15*100
358	SO52	11247.5	243	15*100
359	SO53	11232.5	113	15*100
360	SO54	11217.5	243	15*100
361	SO55	11202.5	113	15*100
362	SO56	11187.5	243	15*100
363	SO57	11172.5	113	15*100
364	SO58	11157.5	243	15*100
365	SO59	11142.5	113	15*100
366	SO60	11127.5	243	15*100
367	SO61	11112.5	113	15*100
368	SO62	11097.5	243	15*100
369	SO63	11082.5	113	15*100
370	SO64	11067.5	243	15*100
371	SO65	11052.5	113	15*100
372	SO66	11037.5	243	15*100
373	SO67	11022.5	113	15*100
374	SO68	11007.5	243	15*100
375	SO69	10992.5	113	15*100
376	SO70	10977.5	243	15*100
377	SO71	10962.5	113	15*100
378	SO72	10947.5	243	15*100
379	SO73	10932.5	113	15*100
380	SO74	10917.5	243	15*100
381	SO75	10902.5	113	15*100
382	SO76	10887.5	243	15*100
383	SO77	10872.5	113	15*100
384	SO78	10857.5	243	15*100
385	SO79	10842.5	113	15*100
386	SO80	10827.5	243	15*100
387	SO81	10812.5	113	15*100
388	SO82	10797.5	243	15*100
389	SO83	10782.5	113	15*100
390	SO84	10767.5	243	15*100
391	SO85	10752.5	113	15*100
392	SO86	10737.5	243	15*100
393	SO87	10722.5	113	15*100
394	SO88	10707.5	243	15*100
395	SO89	10692.5	113	15*100
396	SO90	10677.5	243	15*100
397	SO91	10662.5	113	15*100
398	SO92	10647.5	243	15*100
399	SO93	10632.5	113	15*100
400	SO94	10617.5	243	15*100

Himax Confidential Do Not Copy

No.	Name	X	Y	Bump size(um)
401	SO95	10602.5	113	15*100
402	SO96	10587.5	243	15*100
403	SO97	10572.5	113	15*100
404	SO98	10557.5	243	15*100
405	SO99	10542.5	113	15*100
406	SO100	10527.5	243	15*100
407	SO101	10512.5	113	15*100
408	SO102	10497.5	243	15*100
409	SO103	10482.5	113	15*100
410	SO104	10467.5	243	15*100
411	SO105	10452.5	113	15*100
412	SO106	10437.5	243	15*100
413	SO107	10422.5	113	15*100
414	SO108	10407.5	243	15*100
415	SO109	10392.5	113	15*100
416	SO110	10377.5	243	15*100
417	SO111	10362.5	113	15*100
418	SO112	10347.5	243	15*100
419	SO113	10332.5	113	15*100
420	SO114	10317.5	243	15*100
421	SO115	10302.5	113	15*100
422	SO116	10287.5	243	15*100
423	SO117	10272.5	113	15*100
424	SO118	10257.5	243	15*100
425	SO119	10242.5	113	15*100
426	SO120	10227.5	243	15*100
427	SO121	10212.5	113	15*100
428	SO122	10197.5	243	15*100
429	SO123	10182.5	113	15*100
430	SO124	10167.5	243	15*100
431	SO125	10152.5	113	15*100
432	SO126	10137.5	243	15*100
433	SO127	10122.5	113	15*100
434	SO128	10107.5	243	15*100
435	SO129	10092.5	113	15*100
436	SO130	10077.5	243	15*100
437	SO131	10062.5	113	15*100
438	SO132	10047.5	243	15*100
439	SO133	10032.5	113	15*100
440	SO134	10017.5	243	15*100
441	SO135	10002.5	113	15*100
442	SO136	9987.5	243	15*100
443	SO137	9972.5	113	15*100
444	SO138	9957.5	243	15*100
445	SO139	9942.5	113	15*100
446	SO140	9927.5	243	15*100
447	SO141	9912.5	113	15*100
448	SO142	9897.5	243	15*100
449	SO143	9882.5	113	15*100
450	SO144	9867.5	243	15*100

No.	Name	X	Y	Bump size(um)
451	SO145	9852.5	113	15*100
452	SO146	9837.5	243	15*100
453	SO147	9822.5	113	15*100
454	SO148	9807.5	243	15*100
455	SO149	9792.5	113	15*100
456	SO150	9777.5	243	15*100
457	SO151	9762.5	113	15*100
458	SO152	9747.5	243	15*100
459	SO153	9732.5	113	15*100
460	SO154	9717.5	243	15*100
461	SO155	9702.5	113	15*100
462	SO156	9687.5	243	15*100
463	SO157	9672.5	113	15*100
464	SO158	9657.5	243	15*100
465	SO159	9642.5	113	15*100
466	SO160	9627.5	243	15*100
467	SO161	9612.5	113	15*100
468	SO162	9597.5	243	15*100
469	SO163	9582.5	113	15*100
470	SO164	9567.5	243	15*100
471	SO165	9552.5	113	15*100
472	SO166	9537.5	243	15*100
473	SO167	9522.5	113	15*100
474	SO168	9507.5	243	15*100
475	SO169	9492.5	113	15*100
476	SO170	9477.5	243	15*100
477	SO171	9462.5	113	15*100
478	SO172	9447.5	243	15*100
479	SO173	9432.5	113	15*100
480	SO174	9417.5	243	15*100
481	SO175	9402.5	113	15*100
482	SO176	9387.5	243	15*100
483	SO177	9372.5	113	15*100
484	SO178	9357.5	243	15*100
485	SO179	9342.5	113	15*100
486	SO180	9327.5	243	15*100
487	SO181	9312.5	113	15*100
488	SO182	9297.5	243	15*100
489	SO183	9282.5	113	15*100
490	SO184	9267.5	243	15*100
491	SO185	9252.5	113	15*100
492	SO186	9237.5	243	15*100
493	SO187	9222.5	113	15*100
494	SO188	9207.5	243	15*100
495	SO189	9192.5	113	15*100
496	SO190	9177.5	243	15*100
497	SO191	9162.5	113	15*100
498	SO192	9147.5	243	15*100
499	SO193	9132.5	113	15*100
500	SO194	9117.5	243	15*100

Himax Confidential
Do Not Copy

This information contained herein is the exclusive property of Himax and shall not be distributed, reproduced, or disclosed in whole or in part without prior written permission of Himax.

No.	Name	X	Y	Bump size(um)
501	SO195	9102.5	113	15*100
502	SO196	9087.5	243	15*100
503	SO197	9072.5	113	15*100
504	SO198	9057.5	243	15*100
505	SO199	9042.5	113	15*100
506	SO200	9027.5	243	15*100
507	SO201	9012.5	113	15*100
508	SO202	8997.5	243	15*100
509	SO203	8982.5	113	15*100
510	SO204	8967.5	243	15*100
511	SO205	8952.5	113	15*100
512	SO206	8937.5	243	15*100
513	SO207	8922.5	113	15*100
514	SO208	8907.5	243	15*100
515	SO209	8892.5	113	15*100
516	SO210	8877.5	243	15*100
517	SO211	8862.5	113	15*100
518	SO212	8847.5	243	15*100
519	SO213	8832.5	113	15*100
520	SO214	8817.5	243	15*100
521	SO215	8802.5	113	15*100
522	SO216	8787.5	243	15*100
523	SO217	8772.5	113	15*100
524	SO218	8757.5	243	15*100
525	SO219	8742.5	113	15*100
526	SO220	8727.5	243	15*100
527	SO221	8712.5	113	15*100
528	SO222	8697.5	243	15*100
529	SO223	8682.5	113	15*100
530	SO224	8667.5	243	15*100
531	SO225	8652.5	113	15*100
532	SO226	8637.5	243	15*100
533	SO227	8622.5	113	15*100
534	SO228	8607.5	243	15*100
535	SO229	8592.5	113	15*100
536	SO230	8577.5	243	15*100
537	SO231	8562.5	113	15*100
538	SO232	8547.5	243	15*100
539	SO233	8532.5	113	15*100
540	SO234	8517.5	243	15*100
541	SO235	8502.5	113	15*100
542	SO236	8487.5	243	15*100
543	SO237	8472.5	113	15*100
544	SO238	8457.5	243	15*100
545	SO239	8442.5	113	15*100
546	SO240	8427.5	243	15*100
547	SO241	8412.5	113	15*100
548	SO242	8397.5	243	15*100
549	SO243	8382.5	113	15*100
550	SO244	8367.5	243	15*100

No.	Name	X	Y	Bump size(um)
551	SO245	8352.5	113	15*100
552	SO246	8337.5	243	15*100
553	SO247	8322.5	113	15*100
554	SO248	8307.5	243	15*100
555	SO249	8292.5	113	15*100
556	SO250	8277.5	243	15*100
557	SO251	8262.5	113	15*100
558	SO252	8247.5	243	15*100
559	SO253	8232.5	113	15*100
560	SO254	8217.5	243	15*100
561	SO255	8202.5	113	15*100
562	SO256	8187.5	243	15*100
563	SO257	8172.5	113	15*100
564	SO258	8157.5	243	15*100
565	SO259	8142.5	113	15*100
566	SO260	8127.5	243	15*100
567	SO261	8112.5	113	15*100
568	SO262	8097.5	243	15*100
569	SO263	8082.5	113	15*100
570	SO264	8067.5	243	15*100
571	SO265	8052.5	113	15*100
572	SO266	8037.5	243	15*100
573	SO267	8022.5	113	15*100
574	SO268	8007.5	243	15*100
575	SO269	7992.5	113	15*100
576	SO270	7977.5	243	15*100
577	SO271	7962.5	113	15*100
578	SO272	7947.5	243	15*100
579	SO273	7932.5	113	15*100
580	SO274	7917.5	243	15*100
581	SO275	7902.5	113	15*100
582	SO276	7887.5	243	15*100
583	SO277	7872.5	113	15*100
584	SO278	7857.5	243	15*100
585	SO279	7842.5	113	15*100
586	SO280	7827.5	243	15*100
587	SO281	7812.5	113	15*100
588	SO282	7797.5	243	15*100
589	SO283	7782.5	113	15*100
590	SO284	7767.5	243	15*100
591	SO285	7752.5	113	15*100
592	SO286	7737.5	243	15*100
593	SO287	7722.5	113	15*100
594	SO288	7707.5	243	15*100
595	SO289	7692.5	113	15*100
596	SO290	7677.5	243	15*100
597	SO291	7662.5	113	15*100
598	SO292	7647.5	243	15*100
599	SO293	7632.5	113	15*100
600	SO294	7617.5	243	15*100

Himax Confidential Do Not Copy

No.	Name	X	Y	Bump size(um)
601	SO295	7602.5	113	15*100
602	SO296	7587.5	243	15*100
603	SO297	7572.5	113	15*100
604	SO298	7557.5	243	15*100
605	SO299	7542.5	113	15*100
606	SO300	7527.5	243	15*100
607	SO301	7512.5	113	15*100
608	SO302	7497.5	243	15*100
609	SO303	7482.5	113	15*100
610	SO304	7467.5	243	15*100
611	SO305	7452.5	113	15*100
612	SO306	7437.5	243	15*100
613	SO307	7422.5	113	15*100
614	SO308	7407.5	243	15*100
615	SO309	7392.5	113	15*100
616	SO310	7377.5	243	15*100
617	SO311	7362.5	113	15*100
618	SO312	7347.5	243	15*100
619	SO313	7332.5	113	15*100
620	SO314	7317.5	243	15*100
621	SO315	7302.5	113	15*100
622	SO316	7287.5	243	15*100
623	SO317	7272.5	113	15*100
624	SO318	7257.5	243	15*100
625	SO319	7242.5	113	15*100
626	SO320	7227.5	243	15*100
627	SO321	7212.5	113	15*100
628	SO322	7197.5	243	15*100
629	SO323	7182.5	113	15*100
630	SO324	7167.5	243	15*100
631	SO325	7152.5	113	15*100
632	SO326	7137.5	243	15*100
633	SO327	7122.5	113	15*100
634	SO328	7107.5	243	15*100
635	SO329	7092.5	113	15*100
636	SO330	7077.5	243	15*100
637	SO331	7062.5	113	15*100
638	SO332	7047.5	243	15*100
639	SO333	7032.5	113	15*100
640	SO334	7017.5	243	15*100
641	SO335	7002.5	113	15*100
642	SO336	6987.5	243	15*100
643	SO337	6972.5	113	15*100
644	SO338	6957.5	243	15*100
645	SO339	6942.5	113	15*100
646	SO340	6927.5	243	15*100
647	SO341	6912.5	113	15*100
648	SO342	6897.5	243	15*100
649	SO343	6882.5	113	15*100
650	SO344	6867.5	243	15*100

No.	Name	X	Y	Bump size(um)
651	SO345	6852.5	113	15*100
652	SO346	6837.5	243	15*100
653	SO347	6822.5	113	15*100
654	SO348	6807.5	243	15*100
655	SO349	6792.5	113	15*100
656	SO350	6777.5	243	15*100
657	SO351	6762.5	113	15*100
658	SO352	6747.5	243	15*100
659	SO353	6732.5	113	15*100
660	SO354	6717.5	243	15*100
661	SO355	6702.5	113	15*100
662	SO356	6687.5	243	15*100
663	SO357	6672.5	113	15*100
664	SO358	6657.5	243	15*100
665	SO359	6642.5	113	15*100
666	SO360	6627.5	243	15*100
667	SO361	6612.5	113	15*100
668	SO362	6597.5	243	15*100
669	SO363	6582.5	113	15*100
670	SO364	6567.5	243	15*100
671	SO365	6552.5	113	15*100
672	SO366	6537.5	243	15*100
673	SO367	6522.5	113	15*100
674	SO368	6507.5	243	15*100
675	SO369	6492.5	113	15*100
676	SO370	6477.5	243	15*100
677	SO371	6462.5	113	15*100
678	SO372	6447.5	243	15*100
679	SO373	6432.5	113	15*100
680	SO374	6417.5	243	15*100
681	SO375	6402.5	113	15*100
682	SO376	6387.5	243	15*100
683	SO377	6372.5	113	15*100
684	SO378	6357.5	243	15*100
685	SO379	6342.5	113	15*100
686	SO380	6327.5	243	15*100
687	SO381	6312.5	113	15*100
688	SO382	6297.5	243	15*100
689	SO383	6282.5	113	15*100
690	SO384	6267.5	243	15*100
691	SO385	6252.5	113	15*100
692	SO386	6237.5	243	15*100
693	SO387	6222.5	113	15*100
694	SO388	6207.5	243	15*100
695	SO389	6192.5	113	15*100
696	SO390	6177.5	243	15*100
697	SO391	6162.5	113	15*100
698	SO392	6147.5	243	15*100
699	SO393	6132.5	113	15*100
700	SO394	6117.5	243	15*100

Himax Confidential Do Not Copy

No.	Name	X	Y	Bump size(um)
701	SO395	6102.5	113	15*100
702	SO396	6087.5	243	15*100
703	SO397	6072.5	113	15*100
704	SO398	6057.5	243	15*100
705	SO399	6042.5	113	15*100
706	SO400	6027.5	243	15*100
707	SO401	6012.5	113	15*100
708	SO402	5997.5	243	15*100
709	SO403	5982.5	113	15*100
710	SO404	5967.5	243	15*100
711	SO405	5952.5	113	15*100
712	SO406	5937.5	243	15*100
713	SO407	5922.5	113	15*100
714	SO408	5907.5	243	15*100
715	SO409	5892.5	113	15*100
716	SO410	5877.5	243	15*100
717	SO411	5862.5	113	15*100
718	SO412	5847.5	243	15*100
719	SO413	5832.5	113	15*100
720	SO414	5817.5	243	15*100
721	SO415	5802.5	113	15*100
722	SO416	5787.5	243	15*100
723	SO417	5772.5	113	15*100
724	SO418	5757.5	243	15*100
725	SO419	5742.5	113	15*100
726	SO420	5727.5	243	15*100
727	SO421	5712.5	113	15*100
728	SO422	5697.5	243	15*100
729	SO423	5682.5	113	15*100
730	SO424	5667.5	243	15*100
731	SO425	5652.5	113	15*100
732	SO426	5637.5	243	15*100
733	SO427	5622.5	113	15*100
734	SO428	5607.5	243	15*100
735	SO429	5592.5	113	15*100
736	SO430	5577.5	243	15*100
737	SO431	5562.5	113	15*100
738	SO432	5547.5	243	15*100
739	SO433	5532.5	113	15*100
740	SO434	5517.5	243	15*100
741	SO435	5502.5	113	15*100
742	SO436	5487.5	243	15*100
743	SO437	5472.5	113	15*100
744	SO438	5457.5	243	15*100
745	SO439	5442.5	113	15*100
746	SO440	5427.5	243	15*100
747	SO441	5412.5	113	15*100
748	SO442	5397.5	243	15*100
749	SO443	5382.5	113	15*100
750	SO444	5367.5	243	15*100

No.	Name	X	Y	Bump size(um)
751	SO445	5352.5	113	15*100
752	SO446	5337.5	243	15*100
753	SO447	5322.5	113	15*100
754	SO448	5307.5	243	15*100
755	SO449	5292.5	113	15*100
756	SO450	5277.5	243	15*100
757	SO451	5262.5	113	15*100
758	SO452	5247.5	243	15*100
759	SO453	5232.5	113	15*100
760	SO454	5217.5	243	15*100
761	SO455	5202.5	113	15*100
762	SO456	5187.5	243	15*100
763	SO457	5172.5	113	15*100
764	SO458	5157.5	243	15*100
765	SO459	5142.5	113	15*100
766	SO460	5127.5	243	15*100
767	SO461	5112.5	113	15*100
768	SO462	5097.5	243	15*100
769	SO463	5082.5	113	15*100
770	SO464	5067.5	243	15*100
771	SO465	5052.5	113	15*100
772	SO466	5037.5	243	15*100
773	SO467	5022.5	113	15*100
774	SO468	5007.5	243	15*100
775	SO469	4992.5	113	15*100
776	SO470	4977.5	243	15*100
777	SO471	4962.5	113	15*100
778	SO472	4947.5	243	15*100
779	SO473	4932.5	113	15*100
780	SO474	4917.5	243	15*100
781	SO475	4902.5	113	15*100
782	SO476	4887.5	243	15*100
783	SO477	4872.5	113	15*100
784	SO478	4857.5	243	15*100
785	SO479	4842.5	113	15*100
786	SO480	4827.5	243	15*100
787	SO481	4812.5	113	15*100
788	SO482	4797.5	243	15*100
789	SO483	4782.5	113	15*100
790	SO484	4767.5	243	15*100
791	SO485	4752.5	113	15*100
792	SO486	4737.5	243	15*100
793	SO487	4722.5	113	15*100
794	SO488	4707.5	243	15*100
795	SO489	4692.5	113	15*100
796	SO490	4677.5	243	15*100
797	SO491	4662.5	113	15*100
798	SO492	4647.5	243	15*100
799	SO493	4632.5	113	15*100
800	SO494	4617.5	243	15*100

Himax Confidential Do Not Copy

No.	Name	X	Y	Bump size(um)
801	SO495	4602.5	113	15*100
802	SO496	4587.5	243	15*100
803	SO497	4572.5	113	15*100
804	SO498	4557.5	243	15*100
805	SO499	4542.5	113	15*100
806	SO500	4527.5	243	15*100
807	SO501	4512.5	113	15*100
808	SO502	4497.5	243	15*100
809	SO503	4482.5	113	15*100
810	SO504	4467.5	243	15*100
811	SO505	4452.5	113	15*100
812	SO506	4437.5	243	15*100
813	SO507	4422.5	113	15*100
814	SO508	4407.5	243	15*100
815	SO509	4392.5	113	15*100
816	SO510	4377.5	243	15*100
817	SO511	4362.5	113	15*100
818	SO512	4347.5	243	15*100
819	SO513	4332.5	113	15*100
820	SO514	4317.5	243	15*100
821	SO515	4302.5	113	15*100
822	SO516	4287.5	243	15*100
823	SO517	4272.5	113	15*100
824	SO518	4257.5	243	15*100
825	SO519	4242.5	113	15*100
826	SO520	4227.5	243	15*100
827	SO521	4212.5	113	15*100
828	SO522	4197.5	243	15*100
829	SO523	4182.5	113	15*100
830	SO524	4167.5	243	15*100
831	SO525	4152.5	113	15*100
832	SO526	4137.5	243	15*100
833	SO527	4122.5	113	15*100
834	SO528	4107.5	243	15*100
835	SO529	4092.5	113	15*100
836	SO530	4077.5	243	15*100
837	SO531	4062.5	113	15*100
838	SO532	4047.5	243	15*100
839	SO533	4032.5	113	15*100
840	SO534	4017.5	243	15*100
841	SO535	4002.5	113	15*100
842	SO536	3987.5	243	15*100
843	SO537	3972.5	113	15*100
844	SO538	3957.5	243	15*100
845	SO539	3942.5	113	15*100
846	SO540	3927.5	243	15*100
847	SO541	3912.5	113	15*100
848	SO542	3897.5	243	15*100
849	SO543	3882.5	113	15*100
850	SO544	3867.5	243	15*100

No.	Name	X	Y	Bump size(um)
851	SO545	3852.5	113	15*100
852	SO546	3837.5	243	15*100
853	SO547	3822.5	113	15*100
854	SO548	3807.5	243	15*100
855	SO549	3792.5	113	15*100
856	SO550	3777.5	243	15*100
857	SO551	3762.5	113	15*100
858	SO552	3747.5	243	15*100
859	SO553	3732.5	113	15*100
860	SO554	3717.5	243	15*100
861	SO555	3702.5	113	15*100
862	SO556	3687.5	243	15*100
863	SO557	3672.5	113	15*100
864	SO558	3657.5	243	15*100
865	SO559	3642.5	113	15*100
866	SO560	3627.5	243	15*100
867	SO561	3612.5	113	15*100
868	SO562	3597.5	243	15*100
869	SO563	3582.5	113	15*100
870	SO564	3567.5	243	15*100
871	SO565	3552.5	113	15*100
872	SO566	3537.5	243	15*100
873	SO567	3522.5	113	15*100
874	SO568	3507.5	243	15*100
875	SO569	3492.5	113	15*100
876	SO570	3477.5	243	15*100
877	SO571	3462.5	113	15*100
878	SO572	3447.5	243	15*100
879	SO573	3432.5	113	15*100
880	SO574	3417.5	243	15*100
881	SO575	3402.5	113	15*100
882	SO576	3387.5	243	15*100
883	SO577	3372.5	113	15*100
884	SO578	3357.5	243	15*100
885	SO579	3342.5	113	15*100
886	SO580	3327.5	243	15*100
887	SO581	3312.5	113	15*100
888	SO582	3297.5	243	15*100
889	SO583	3282.5	113	15*100
890	SO584	3267.5	243	15*100
891	SO585	3252.5	113	15*100
892	SO586	3237.5	243	15*100
893	SO587	3222.5	113	15*100
894	SO588	3207.5	243	15*100
895	SO589	3192.5	113	15*100
896	SO590	3177.5	243	15*100
897	SO591	3162.5	113	15*100
898	SO592	3147.5	243	15*100
899	SO593	3132.5	113	15*100
900	SO594	3117.5	243	15*100

Himax Confidential Do Not Copy

No.	Name	X	Y	Bump size(um)
901	SO595	3102.5	113	15*100
902	SO596	3087.5	243	15*100
903	SO597	3072.5	113	15*100
904	SO598	3057.5	243	15*100
905	SO599	3042.5	113	15*100
906	SO600	3027.5	243	15*100
907	SO601	3012.5	113	15*100
908	SO602	2997.5	243	15*100
909	SO603	2982.5	113	15*100
910	SO604	2967.5	243	15*100
911	SO605	2952.5	113	15*100
912	SO606	2937.5	243	15*100
913	SO607	2922.5	113	15*100
914	SO608	2907.5	243	15*100
915	SO609	2892.5	113	15*100
916	SO610	2877.5	243	15*100
917	SO611	2862.5	113	15*100
918	SO612	2847.5	243	15*100
919	SO613	2832.5	113	15*100
920	SO614	2817.5	243	15*100
921	SO615	2802.5	113	15*100
922	SO616	2787.5	243	15*100
923	SO617	2772.5	113	15*100
924	SO618	2757.5	243	15*100
925	SO619	2742.5	113	15*100
926	SO620	2727.5	243	15*100
927	SO621	2712.5	113	15*100
928	SO622	2697.5	243	15*100
929	SO623	2682.5	113	15*100
930	SO624	2667.5	243	15*100
931	SO625	2652.5	113	15*100
932	SO626	2637.5	243	15*100
933	SO627	2622.5	113	15*100
934	SO628	2607.5	243	15*100
935	SO629	2592.5	113	15*100
936	SO630	2577.5	243	15*100
937	SO631	2562.5	113	15*100
938	SO632	2547.5	243	15*100
939	SO633	2532.5	113	15*100
940	SO634	2517.5	243	15*100
941	SO635	2502.5	113	15*100
942	SO636	2487.5	243	15*100
943	SO637	2472.5	113	15*100
944	SO638	2457.5	243	15*100
945	SO639	2442.5	113	15*100
946	SO640	2427.5	243	15*100
947	SO641	2412.5	113	15*100
948	SO642	2397.5	243	15*100
949	SO643	2382.5	113	15*100
950	SO644	2367.5	243	15*100

No.	Name	X	Y	Bump size(um)
951	SO645	2352.5	113	15*100
952	SO646	2337.5	243	15*100
953	SO647	2322.5	113	15*100
954	SO648	2307.5	243	15*100
955	SO649	2292.5	113	15*100
956	SO650	2277.5	243	15*100
957	SO651	2262.5	113	15*100
958	SO652	2247.5	243	15*100
959	SO653	2232.5	113	15*100
960	SO654	2217.5	243	15*100
961	SO655	2202.5	113	15*100
962	SO656	2187.5	243	15*100
963	SO657	2172.5	113	15*100
964	SO658	2157.5	243	15*100
965	SO659	2142.5	113	15*100
966	SO660	2127.5	243	15*100
967	SO661	2112.5	113	15*100
968	SO662	2097.5	243	15*100
969	SO663	2082.5	113	15*100
970	SO664	2067.5	243	15*100
971	SO665	2052.5	113	15*100
972	SO666	2037.5	243	15*100
973	SO667	2022.5	113	15*100
974	SO668	2007.5	243	15*100
975	SO669	1992.5	113	15*100
976	SO670	1977.5	243	15*100
977	SO671	1962.5	113	15*100
978	SO672	1947.5	243	15*100
979	SO673	1932.5	113	15*100
980	SO674	1917.5	243	15*100
981	SO675	1902.5	113	15*100
982	SO676	1887.5	243	15*100
983	SO677	1872.5	113	15*100
984	SO678	1857.5	243	15*100
985	SO679	1842.5	113	15*100
986	SO680	1827.5	243	15*100
987	SO681	1812.5	113	15*100
988	SO682	1797.5	243	15*100
989	SO683	1782.5	113	15*100
990	SO684	1767.5	243	15*100
991	SO685	1752.5	113	15*100
992	SO686	1737.5	243	15*100
993	SO687	1722.5	113	15*100
994	SO688	1707.5	243	15*100
995	SO689	1692.5	113	15*100
996	SO690	1677.5	243	15*100
997	SO691	1662.5	113	15*100
998	SO692	1647.5	243	15*100
999	SO693	1632.5	113	15*100
1000	SO694	1617.5	243	15*100

Himax Confidential
Do Not Copy

This information contained herein is the exclusive property of Himax and shall not be distributed, reproduced, or disclosed in whole or in part without prior written permission of Himax.

No.	Name	X	Y	Bump size(um)
1001	SO695	1602.5	113	15*100
1002	SO696	1587.5	243	15*100
1003	SO697	1572.5	113	15*100
1004	SO698	1557.5	243	15*100
1005	SO699	1542.5	113	15*100
1006	SO700	1527.5	243	15*100
1007	SO701	1512.5	113	15*100
1008	SO702	1497.5	243	15*100
1009	SO703	1482.5	113	15*100
1010	SO704	1467.5	243	15*100
1011	SO705	1452.5	113	15*100
1012	SO706	1437.5	243	15*100
1013	SO707	1422.5	113	15*100
1014	SO708	1407.5	243	15*100
1015	SO709	1392.5	113	15*100
1016	SO710	1377.5	243	15*100
1017	SO711	1362.5	113	15*100
1018	SO712	1347.5	243	15*100
1019	SO713	1332.5	113	15*100
1020	SO714	1317.5	243	15*100
1021	SO715	1302.5	113	15*100
1022	SO716	1287.5	243	15*100
1023	SO717	1272.5	113	15*100
1024	SO718	1257.5	243	15*100
1025	SO719	1242.5	113	15*100
1026	SO720	1227.5	243	15*100
1027	SO721	1212.5	113	15*100
1028	SO722	1197.5	243	15*100
1029	SO723	1182.5	113	15*100
1030	SO724	1167.5	243	15*100
1031	SO725	1152.5	113	15*100
1032	SO726	1137.5	243	15*100
1033	SO727	1122.5	113	15*100
1034	SO728	1107.5	243	15*100
1035	SO729	1092.5	113	15*100
1036	SO730	1077.5	243	15*100
1037	SO731	1062.5	113	15*100
1038	SO732	1047.5	243	15*100
1039	SO733	1032.5	113	15*100
1040	SO734	1017.5	243	15*100
1041	SO735	1002.5	113	15*100
1042	SO736	987.5	243	15*100
1043	SO737	972.5	113	15*100
1044	SO738	957.5	243	15*100
1045	SO739	942.5	113	15*100
1046	SO740	927.5	243	15*100
1047	SO741	912.5	113	15*100
1048	SO742	897.5	243	15*100
1049	SO743	882.5	113	15*100
1050	SO744	867.5	243	15*100

No.	Name	X	Y	Bump size(um)
1051	SO745	852.5	113	15*100
1052	SO746	837.5	243	15*100
1053	SO747	822.5	113	15*100
1054	SO748	807.5	243	15*100
1055	SO749	792.5	113	15*100
1056	SO750	777.5	243	15*100
1057	SO751	762.5	113	15*100
1058	SO752	747.5	243	15*100
1059	SO753	732.5	113	15*100
1060	SO754	717.5	243	15*100
1061	SO755	702.5	113	15*100
1062	SO756	687.5	243	15*100
1063	SO757	672.5	113	15*100
1064	SO758	657.5	243	15*100
1065	SO759	642.5	113	15*100
1066	SO760	627.5	243	15*100
1067	SO761	612.5	113	15*100
1068	SO762	597.5	243	15*100
1069	SO763	582.5	113	15*100
1070	SO764	567.5	243	15*100
1071	SO765	552.5	113	15*100
1072	SO766	537.5	243	15*100
1073	SO767	522.5	113	15*100
1074	SO768	507.5	243	15*100
1075	SHIELDING	455	258	30*70
1076	SHIELDING	405	258	30*70
1077	SHIELDING	355	258	30*70
1078	SHIELDING	50	258	30*70
1079	SHIELDING	0	258	30*70
1080	SHIELDING	-50	258	30*70
1081	SHIELDING	-355	258	30*70
1082	SHIELDING	-405	258	30*70
1083	SHIELDING	-455	258	30*70
1084	SO769	-507.5	243	15*100
1085	SO770	-522.5	113	15*100
1086	SO771	-537.5	243	15*100
1087	SO772	-552.5	113	15*100
1088	SO773	-567.5	243	15*100
1089	SO774	-582.5	113	15*100
1090	SO775	-597.5	243	15*100
1091	SO776	-612.5	113	15*100
1092	SO777	-627.5	243	15*100
1093	SO778	-642.5	113	15*100
1094	SO779	-657.5	243	15*100
1095	SO780	-672.5	113	15*100
1096	SO781	-687.5	243	15*100
1097	SO782	-702.5	113	15*100
1098	SO783	-717.5	243	15*100
1099	SO784	-732.5	113	15*100
1100	SO785	-747.5	243	15*100

Himax Confidential
Do Not Copy

No.	Name	X	Y	Bump size(um)
1101	SO786	-762.5	113	15*100
1102	SO787	-777.5	243	15*100
1103	SO788	-792.5	113	15*100
1104	SO789	-807.5	243	15*100
1105	SO790	-822.5	113	15*100
1106	SO791	-837.5	243	15*100
1107	SO792	-852.5	113	15*100
1108	SO793	-867.5	243	15*100
1109	SO794	-882.5	113	15*100
1110	SO795	-897.5	243	15*100
1111	SO796	-912.5	113	15*100
1112	SO797	-927.5	243	15*100
1113	SO798	-942.5	113	15*100
1114	SO799	-957.5	243	15*100
1115	SO800	-972.5	113	15*100
1116	SO801	-987.5	243	15*100
1117	SO802	-1002.5	113	15*100
1118	SO803	-1017.5	243	15*100
1119	SO804	-1032.5	113	15*100
1120	SO805	-1047.5	243	15*100
1121	SO806	-1062.5	113	15*100
1122	SO807	-1077.5	243	15*100
1123	SO808	-1092.5	113	15*100
1124	SO809	-1107.5	243	15*100
1125	SO810	-1122.5	113	15*100
1126	SO811	-1137.5	243	15*100
1127	SO812	-1152.5	113	15*100
1128	SO813	-1167.5	243	15*100
1129	SO814	-1182.5	113	15*100
1130	SO815	-1197.5	243	15*100
1131	SO816	-1212.5	113	15*100
1132	SO817	-1227.5	243	15*100
1133	SO818	-1242.5	113	15*100
1134	SO819	-1257.5	243	15*100
1135	SO820	-1272.5	113	15*100
1136	SO821	-1287.5	243	15*100
1137	SO822	-1302.5	113	15*100
1138	SO823	-1317.5	243	15*100
1139	SO824	-1332.5	113	15*100
1140	SO825	-1347.5	243	15*100
1141	SO826	-1362.5	113	15*100
1142	SO827	-1377.5	243	15*100
1143	SO828	-1392.5	113	15*100
1144	SO829	-1407.5	243	15*100
1145	SO830	-1422.5	113	15*100
1146	SO831	-1437.5	243	15*100
1147	SO832	-1452.5	113	15*100
1148	SO833	-1467.5	243	15*100
1149	SO834	-1482.5	113	15*100
1150	SO835	-1497.5	243	15*100

No.	Name	X	Y	Bump size(um)
1151	SO836	-1512.5	113	15*100
1152	SO837	-1527.5	243	15*100
1153	SO838	-1542.5	113	15*100
1154	SO839	-1557.5	243	15*100
1155	SO840	-1572.5	113	15*100
1156	SO841	-1587.5	243	15*100
1157	SO842	-1602.5	113	15*100
1158	SO843	-1617.5	243	15*100
1159	SO844	-1632.5	113	15*100
1160	SO845	-1647.5	243	15*100
1161	SO846	-1662.5	113	15*100
1162	SO847	-1677.5	243	15*100
1163	SO848	-1692.5	113	15*100
1164	SO849	-1707.5	243	15*100
1165	SO850	-1722.5	113	15*100
1166	SO851	-1737.5	243	15*100
1167	SO852	-1752.5	113	15*100
1168	SO853	-1767.5	243	15*100
1169	SO854	-1782.5	113	15*100
1170	SO855	-1797.5	243	15*100
1171	SO856	-1812.5	113	15*100
1172	SO857	-1827.5	243	15*100
1173	SO858	-1842.5	113	15*100
1174	SO859	-1857.5	243	15*100
1175	SO860	-1872.5	113	15*100
1176	SO861	-1887.5	243	15*100
1177	SO862	-1902.5	113	15*100
1178	SO863	-1917.5	243	15*100
1179	SO864	-1932.5	113	15*100
1180	SO865	-1947.5	243	15*100
1181	SO866	-1962.5	113	15*100
1182	SO867	-1977.5	243	15*100
1183	SO868	-1992.5	113	15*100
1184	SO869	-2007.5	243	15*100
1185	SO870	-2022.5	113	15*100
1186	SO871	-2037.5	243	15*100
1187	SO872	-2052.5	113	15*100
1188	SO873	-2067.5	243	15*100
1189	SO874	-2082.5	113	15*100
1190	SO875	-2097.5	243	15*100
1191	SO876	-2112.5	113	15*100
1192	SO877	-2127.5	243	15*100
1193	SO878	-2142.5	113	15*100
1194	SO879	-2157.5	243	15*100
1195	SO880	-2172.5	113	15*100
1196	SO881	-2187.5	243	15*100
1197	SO882	-2202.5	113	15*100
1198	SO883	-2217.5	243	15*100
1199	SO884	-2232.5	113	15*100
1200	SO885	-2247.5	243	15*100

Himax Confidential
Do Not Copy

No.	Name	X	Y	Bump size(um)
1201	SO886	-2262.5	113	15*100
1202	SO887	-2277.5	243	15*100
1203	SO888	-2292.5	113	15*100
1204	SO889	-2307.5	243	15*100
1205	SO890	-2322.5	113	15*100
1206	SO891	-2337.5	243	15*100
1207	SO892	-2352.5	113	15*100
1208	SO893	-2367.5	243	15*100
1209	SO894	-2382.5	113	15*100
1210	SO895	-2397.5	243	15*100
1211	SO896	-2412.5	113	15*100
1212	SO897	-2427.5	243	15*100
1213	SO898	-2442.5	113	15*100
1214	SO899	-2457.5	243	15*100
1215	SO900	-2472.5	113	15*100
1216	SO901	-2487.5	243	15*100
1217	SO902	-2502.5	113	15*100
1218	SO903	-2517.5	243	15*100
1219	SO904	-2532.5	113	15*100
1220	SO905	-2547.5	243	15*100
1221	SO906	-2562.5	113	15*100
1222	SO907	-2577.5	243	15*100
1223	SO908	-2592.5	113	15*100
1224	SO909	-2607.5	243	15*100
1225	SO910	-2622.5	113	15*100
1226	SO911	-2637.5	243	15*100
1227	SO912	-2652.5	113	15*100
1228	SO913	-2667.5	243	15*100
1229	SO914	-2682.5	113	15*100
1230	SO915	-2697.5	243	15*100
1231	SO916	-2712.5	113	15*100
1232	SO917	-2727.5	243	15*100
1233	SO918	-2742.5	113	15*100
1234	SO919	-2757.5	243	15*100
1235	SO920	-2772.5	113	15*100
1236	SO921	-2787.5	243	15*100
1237	SO922	-2802.5	113	15*100
1238	SO923	-2817.5	243	15*100
1239	SO924	-2832.5	113	15*100
1240	SO925	-2847.5	243	15*100
1241	SO926	-2862.5	113	15*100
1242	SO927	-2877.5	243	15*100
1243	SO928	-2892.5	113	15*100
1244	SO929	-2907.5	243	15*100
1245	SO930	-2922.5	113	15*100
1246	SO931	-2937.5	243	15*100
1247	SO932	-2952.5	113	15*100
1248	SO933	-2967.5	243	15*100
1249	SO934	-2982.5	113	15*100
1250	SO935	-2997.5	243	15*100

No.	Name	X	Y	Bump size(um)
1251	SO936	-3012.5	113	15*100
1252	SO937	-3027.5	243	15*100
1253	SO938	-3042.5	113	15*100
1254	SO939	-3057.5	243	15*100
1255	SO940	-3072.5	113	15*100
1256	SO941	-3087.5	243	15*100
1257	SO942	-3102.5	113	15*100
1258	SO943	-3117.5	243	15*100
1259	SO944	-3132.5	113	15*100
1260	SO945	-3147.5	243	15*100
1261	SO946	-3162.5	113	15*100
1262	SO947	-3177.5	243	15*100
1263	SO948	-3192.5	113	15*100
1264	SO949	-3207.5	243	15*100
1265	SO950	-3222.5	113	15*100
1266	SO951	-3237.5	243	15*100
1267	SO952	-3252.5	113	15*100
1268	SO953	-3267.5	243	15*100
1269	SO954	-3282.5	113	15*100
1270	SO955	-3297.5	243	15*100
1271	SO956	-3312.5	113	15*100
1272	SO957	-3327.5	243	15*100
1273	SO958	-3342.5	113	15*100
1274	SO959	-3357.5	243	15*100
1275	SO960	-3372.5	113	15*100
1276	SO961	-3387.5	243	15*100
1277	SO962	-3402.5	113	15*100
1278	SO963	-3417.5	243	15*100
1279	SO964	-3432.5	113	15*100
1280	SO965	-3447.5	243	15*100
1281	SO966	-3462.5	113	15*100
1282	SO967	-3477.5	243	15*100
1283	SO968	-3492.5	113	15*100
1284	SO969	-3507.5	243	15*100
1285	SO970	-3522.5	113	15*100
1286	SO971	-3537.5	243	15*100
1287	SO972	-3552.5	113	15*100
1288	SO973	-3567.5	243	15*100
1289	SO974	-3582.5	113	15*100
1290	SO975	-3597.5	243	15*100
1291	SO976	-3612.5	113	15*100
1292	SO977	-3627.5	243	15*100
1293	SO978	-3642.5	113	15*100
1294	SO979	-3657.5	243	15*100
1295	SO980	-3672.5	113	15*100
1296	SO981	-3687.5	243	15*100
1297	SO982	-3702.5	113	15*100
1298	SO983	-3717.5	243	15*100
1299	SO984	-3732.5	113	15*100
1300	SO985	-3747.5	243	15*100

Himax Confidential
Do Not Copy

No.	Name	X	Y	Bump size(um)
1301	SO986	-3762.5	113	15*100
1302	SO987	-3777.5	243	15*100
1303	SO988	-3792.5	113	15*100
1304	SO989	-3807.5	243	15*100
1305	SO990	-3822.5	113	15*100
1306	SO991	-3837.5	243	15*100
1307	SO992	-3852.5	113	15*100
1308	SO993	-3867.5	243	15*100
1309	SO994	-3882.5	113	15*100
1310	SO995	-3897.5	243	15*100
1311	SO996	-3912.5	113	15*100
1312	SO997	-3927.5	243	15*100
1313	SO998	-3942.5	113	15*100
1314	SO999	-3957.5	243	15*100
1315	SO1000	-3972.5	113	15*100
1316	SO1001	-3987.5	243	15*100
1317	SO1002	-4002.5	113	15*100
1318	SO1003	-4017.5	243	15*100
1319	SO1004	-4032.5	113	15*100
1320	SO1005	-4047.5	243	15*100
1321	SO1006	-4062.5	113	15*100
1322	SO1007	-4077.5	243	15*100
1323	SO1008	-4092.5	113	15*100
1324	SO1009	-4107.5	243	15*100
1325	SO1010	-4122.5	113	15*100
1326	SO1011	-4137.5	243	15*100
1327	SO1012	-4152.5	113	15*100
1328	SO1013	-4167.5	243	15*100
1329	SO1014	-4182.5	113	15*100
1330	SO1015	-4197.5	243	15*100
1331	SO1016	-4212.5	113	15*100
1332	SO1017	-4227.5	243	15*100
1333	SO1018	-4242.5	113	15*100
1334	SO1019	-4257.5	243	15*100
1335	SO1020	-4272.5	113	15*100
1336	SO1021	-4287.5	243	15*100
1337	SO1022	-4302.5	113	15*100
1338	SO1023	-4317.5	243	15*100
1339	SO1024	-4332.5	113	15*100
1340	SO1025	-4347.5	243	15*100
1341	SO1026	-4362.5	113	15*100
1342	SO1027	-4377.5	243	15*100
1343	SO1028	-4392.5	113	15*100
1344	SO1029	-4407.5	243	15*100
1345	SO1030	-4422.5	113	15*100
1346	SO1031	-4437.5	243	15*100
1347	SO1032	-4452.5	113	15*100
1348	SO1033	-4467.5	243	15*100
1349	SO1034	-4482.5	113	15*100
1350	SO1035	-4497.5	243	15*100

No.	Name	X	Y	Bump size(um)
1351	SO1036	-4512.5	113	15*100
1352	SO1037	-4527.5	243	15*100
1353	SO1038	-4542.5	113	15*100
1354	SO1039	-4557.5	243	15*100
1355	SO1040	-4572.5	113	15*100
1356	SO1041	-4587.5	243	15*100
1357	SO1042	-4602.5	113	15*100
1358	SO1043	-4617.5	243	15*100
1359	SO1044	-4632.5	113	15*100
1360	SO1045	-4647.5	243	15*100
1361	SO1046	-4662.5	113	15*100
1362	SO1047	-4677.5	243	15*100
1363	SO1048	-4692.5	113	15*100
1364	SO1049	-4707.5	243	15*100
1365	SO1050	-4722.5	113	15*100
1366	SO1051	-4737.5	243	15*100
1367	SO1052	-4752.5	113	15*100
1368	SO1053	-4767.5	243	15*100
1369	SO1054	-4782.5	113	15*100
1370	SO1055	-4797.5	243	15*100
1371	SO1056	-4812.5	113	15*100
1372	SO1057	-4827.5	243	15*100
1373	SO1058	-4842.5	113	15*100
1374	SO1059	-4857.5	243	15*100
1375	SO1060	-4872.5	113	15*100
1376	SO1061	-4887.5	243	15*100
1377	SO1062	-4902.5	113	15*100
1378	SO1063	-4917.5	243	15*100
1379	SO1064	-4932.5	113	15*100
1380	SO1065	-4947.5	243	15*100
1381	SO1066	-4962.5	113	15*100
1382	SO1067	-4977.5	243	15*100
1383	SO1068	-4992.5	113	15*100
1384	SO1069	-5007.5	243	15*100
1385	SO1070	-5022.5	113	15*100
1386	SO1071	-5037.5	243	15*100
1387	SO1072	-5052.5	113	15*100
1388	SO1073	-5067.5	243	15*100
1389	SO1074	-5082.5	113	15*100
1390	SO1075	-5097.5	243	15*100
1391	SO1076	-5112.5	113	15*100
1392	SO1077	-5127.5	243	15*100
1393	SO1078	-5142.5	113	15*100
1394	SO1079	-5157.5	243	15*100
1395	SO1080	-5172.5	113	15*100
1396	SO1081	-5187.5	243	15*100
1397	SO1082	-5202.5	113	15*100
1398	SO1083	-5217.5	243	15*100
1399	SO1084	-5232.5	113	15*100
1400	SO1085	-5247.5	243	15*100

Himax Confidential
Do Not Copy

No.	Name	X	Y	Bump size(um)
1401	SO1086	-5262.5	113	15*100
1402	SO1087	-5277.5	243	15*100
1403	SO1088	-5292.5	113	15*100
1404	SO1089	-5307.5	243	15*100
1405	SO1090	-5322.5	113	15*100
1406	SO1091	-5337.5	243	15*100
1407	SO1092	-5352.5	113	15*100
1408	SO1093	-5367.5	243	15*100
1409	SO1094	-5382.5	113	15*100
1410	SO1095	-5397.5	243	15*100
1411	SO1096	-5412.5	113	15*100
1412	SO1097	-5427.5	243	15*100
1413	SO1098	-5442.5	113	15*100
1414	SO1099	-5457.5	243	15*100
1415	SO1100	-5472.5	113	15*100
1416	SO1101	-5487.5	243	15*100
1417	SO1102	-5502.5	113	15*100
1418	SO1103	-5517.5	243	15*100
1419	SO1104	-5532.5	113	15*100
1420	SO1105	-5547.5	243	15*100
1421	SO1106	-5562.5	113	15*100
1422	SO1107	-5577.5	243	15*100
1423	SO1108	-5592.5	113	15*100
1424	SO1109	-5607.5	243	15*100
1425	SO1110	-5622.5	113	15*100
1426	SO1111	-5637.5	243	15*100
1427	SO1112	-5652.5	113	15*100
1428	SO1113	-5667.5	243	15*100
1429	SO1114	-5682.5	113	15*100
1430	SO1115	-5697.5	243	15*100
1431	SO1116	-5712.5	113	15*100
1432	SO1117	-5727.5	243	15*100
1433	SO1118	-5742.5	113	15*100
1434	SO1119	-5757.5	243	15*100
1435	SO1120	-5772.5	113	15*100
1436	SO1121	-5787.5	243	15*100
1437	SO1122	-5802.5	113	15*100
1438	SO1123	-5817.5	243	15*100
1439	SO1124	-5832.5	113	15*100
1440	SO1125	-5847.5	243	15*100
1441	SO1126	-5862.5	113	15*100
1442	SO1127	-5877.5	243	15*100
1443	SO1128	-5892.5	113	15*100
1444	SO1129	-5907.5	243	15*100
1445	SO1130	-5922.5	113	15*100
1446	SO1131	-5937.5	243	15*100
1447	SO1132	-5952.5	113	15*100
1448	SO1133	-5967.5	243	15*100
1449	SO1134	-5982.5	113	15*100
1450	SO1135	-5997.5	243	15*100

No.	Name	X	Y	Bump size(um)
1451	SO1136	-6012.5	113	15*100
1452	SO1137	-6027.5	243	15*100
1453	SO1138	-6042.5	113	15*100
1454	SO1139	-6057.5	243	15*100
1455	SO1140	-6072.5	113	15*100
1456	SO1141	-6087.5	243	15*100
1457	SO1142	-6102.5	113	15*100
1458	SO1143	-6117.5	243	15*100
1459	SO1144	-6132.5	113	15*100
1460	SO1145	-6147.5	243	15*100
1461	SO1146	-6162.5	113	15*100
1462	SO1147	-6177.5	243	15*100
1463	SO1148	-6192.5	113	15*100
1464	SO1149	-6207.5	243	15*100
1465	SO1150	-6222.5	113	15*100
1466	SO1151	-6237.5	243	15*100
1467	SO1152	-6252.5	113	15*100
1468	SO1153	-6267.5	243	15*100
1469	SO1154	-6282.5	113	15*100
1470	SO1155	-6297.5	243	15*100
1471	SO1156	-6312.5	113	15*100
1472	SO1157	-6327.5	243	15*100
1473	SO1158	-6342.5	113	15*100
1474	SO1159	-6357.5	243	15*100
1475	SO1160	-6372.5	113	15*100
1476	SO1161	-6387.5	243	15*100
1477	SO1162	-6402.5	113	15*100
1478	SO1163	-6417.5	243	15*100
1479	SO1164	-6432.5	113	15*100
1480	SO1165	-6447.5	243	15*100
1481	SO1166	-6462.5	113	15*100
1482	SO1167	-6477.5	243	15*100
1483	SO1168	-6492.5	113	15*100
1484	SO1169	-6507.5	243	15*100
1485	SO1170	-6522.5	113	15*100
1486	SO1171	-6537.5	243	15*100
1487	SO1172	-6552.5	113	15*100
1488	SO1173	-6567.5	243	15*100
1489	SO1174	-6582.5	113	15*100
1490	SO1175	-6597.5	243	15*100
1491	SO1176	-6612.5	113	15*100
1492	SO1177	-6627.5	243	15*100
1493	SO1178	-6642.5	113	15*100
1494	SO1179	-6657.5	243	15*100
1495	SO1180	-6672.5	113	15*100
1496	SO1181	-6687.5	243	15*100
1497	SO1182	-6702.5	113	15*100
1498	SO1183	-6717.5	243	15*100
1499	SO1184	-6732.5	113	15*100
1500	SO1185	-6747.5	243	15*100

Himax Confidential
Do Not Copy

No.	Name	X	Y	Bump size(um)
1501	SO1186	-6762.5	113	15*100
1502	SO1187	-6777.5	243	15*100
1503	SO1188	-6792.5	113	15*100
1504	SO1189	-6807.5	243	15*100
1505	SO1190	-6822.5	113	15*100
1506	SO1191	-6837.5	243	15*100
1507	SO1192	-6852.5	113	15*100
1508	SO1193	-6867.5	243	15*100
1509	SO1194	-6882.5	113	15*100
1510	SO1195	-6897.5	243	15*100
1511	SO1196	-6912.5	113	15*100
1512	SO1197	-6927.5	243	15*100
1513	SO1198	-6942.5	113	15*100
1514	SO1199	-6957.5	243	15*100
1515	SO1200	-6972.5	113	15*100
1516	SO1201	-6987.5	243	15*100
1517	SO1202	-7002.5	113	15*100
1518	SO1203	-7017.5	243	15*100
1519	SO1204	-7032.5	113	15*100
1520	SO1205	-7047.5	243	15*100
1521	SO1206	-7062.5	113	15*100
1522	SO1207	-7077.5	243	15*100
1523	SO1208	-7092.5	113	15*100
1524	SO1209	-7107.5	243	15*100
1525	SO1210	-7122.5	113	15*100
1526	SO1211	-7137.5	243	15*100
1527	SO1212	-7152.5	113	15*100
1528	SO1213	-7167.5	243	15*100
1529	SO1214	-7182.5	113	15*100
1530	SO1215	-7197.5	243	15*100
1531	SO1216	-7212.5	113	15*100
1532	SO1217	-7227.5	243	15*100
1533	SO1218	-7242.5	113	15*100
1534	SO1219	-7257.5	243	15*100
1535	SO1220	-7272.5	113	15*100
1536	SO1221	-7287.5	243	15*100
1537	SO1222	-7302.5	113	15*100
1538	SO1223	-7317.5	243	15*100
1539	SO1224	-7332.5	113	15*100
1540	SO1225	-7347.5	243	15*100
1541	SO1226	-7362.5	113	15*100
1542	SO1227	-7377.5	243	15*100
1543	SO1228	-7392.5	113	15*100
1544	SO1229	-7407.5	243	15*100
1545	SO1230	-7422.5	113	15*100
1546	SO1231	-7437.5	243	15*100
1547	SO1232	-7452.5	113	15*100
1548	SO1233	-7467.5	243	15*100
1549	SO1234	-7482.5	113	15*100
1550	SO1235	-7497.5	243	15*100

No.	Name	X	Y	Bump size(um)
1551	SO1236	-7512.5	113	15*100
1552	SO1237	-7527.5	243	15*100
1553	SO1238	-7542.5	113	15*100
1554	SO1239	-7557.5	243	15*100
1555	SO1240	-7572.5	113	15*100
1556	SO1241	-7587.5	243	15*100
1557	SO1242	-7602.5	113	15*100
1558	SO1243	-7617.5	243	15*100
1559	SO1244	-7632.5	113	15*100
1560	SO1245	-7647.5	243	15*100
1561	SO1246	-7662.5	113	15*100
1562	SO1247	-7677.5	243	15*100
1563	SO1248	-7692.5	113	15*100
1564	SO1249	-7707.5	243	15*100
1565	SO1250	-7722.5	113	15*100
1566	SO1251	-7737.5	243	15*100
1567	SO1252	-7752.5	113	15*100
1568	SO1253	-7767.5	243	15*100
1569	SO1254	-7782.5	113	15*100
1570	SO1255	-7797.5	243	15*100
1571	SO1256	-7812.5	113	15*100
1572	SO1257	-7827.5	243	15*100
1573	SO1258	-7842.5	113	15*100
1574	SO1259	-7857.5	243	15*100
1575	SO1260	-7872.5	113	15*100
1576	SO1261	-7887.5	243	15*100
1577	SO1262	-7902.5	113	15*100
1578	SO1263	-7917.5	243	15*100
1579	SO1264	-7932.5	113	15*100
1580	SO1265	-7947.5	243	15*100
1581	SO1266	-7962.5	113	15*100
1582	SO1267	-7977.5	243	15*100
1583	SO1268	-7992.5	113	15*100
1584	SO1269	-8007.5	243	15*100
1585	SO1270	-8022.5	113	15*100
1586	SO1271	-8037.5	243	15*100
1587	SO1272	-8052.5	113	15*100
1588	SO1273	-8067.5	243	15*100
1589	SO1274	-8082.5	113	15*100
1590	SO1275	-8097.5	243	15*100
1591	SO1276	-8112.5	113	15*100
1592	SO1277	-8127.5	243	15*100
1593	SO1278	-8142.5	113	15*100
1594	SO1279	-8157.5	243	15*100
1595	SO1280	-8172.5	113	15*100
1596	SO1281	-8187.5	243	15*100
1597	SO1282	-8202.5	113	15*100
1598	SO1283	-8217.5	243	15*100
1599	SO1284	-8232.5	113	15*100
1600	SO1285	-8247.5	243	15*100

Himax Confidential
Do Not Copy

This information contained herein is the exclusive property of Himax and shall not be distributed, reproduced, or disclosed in whole or in part without prior written permission of Himax.

No.	Name	X	Y	Bump size(um)
1601	SO1286	-8262.5	113	15*100
1602	SO1287	-8277.5	243	15*100
1603	SO1288	-8292.5	113	15*100
1604	SO1289	-8307.5	243	15*100
1605	SO1290	-8322.5	113	15*100
1606	SO1291	-8337.5	243	15*100
1607	SO1292	-8352.5	113	15*100
1608	SO1293	-8367.5	243	15*100
1609	SO1294	-8382.5	113	15*100
1610	SO1295	-8397.5	243	15*100
1611	SO1296	-8412.5	113	15*100
1612	SO1297	-8427.5	243	15*100
1613	SO1298	-8442.5	113	15*100
1614	SO1299	-8457.5	243	15*100
1615	SO1300	-8472.5	113	15*100
1616	SO1301	-8487.5	243	15*100
1617	SO1302	-8502.5	113	15*100
1618	SO1303	-8517.5	243	15*100
1619	SO1304	-8532.5	113	15*100
1620	SO1305	-8547.5	243	15*100
1621	SO1306	-8562.5	113	15*100
1622	SO1307	-8577.5	243	15*100
1623	SO1308	-8592.5	113	15*100
1624	SO1309	-8607.5	243	15*100
1625	SO1310	-8622.5	113	15*100
1626	SO1311	-8637.5	243	15*100
1627	SO1312	-8652.5	113	15*100
1628	SO1313	-8667.5	243	15*100
1629	SO1314	-8682.5	113	15*100
1630	SO1315	-8697.5	243	15*100
1631	SO1316	-8712.5	113	15*100
1632	SO1317	-8727.5	243	15*100
1633	SO1318	-8742.5	113	15*100
1634	SO1319	-8757.5	243	15*100
1635	SO1320	-8772.5	113	15*100
1636	SO1321	-8787.5	243	15*100
1637	SO1322	-8802.5	113	15*100
1638	SO1323	-8817.5	243	15*100
1639	SO1324	-8832.5	113	15*100
1640	SO1325	-8847.5	243	15*100
1641	SO1326	-8862.5	113	15*100
1642	SO1327	-8877.5	243	15*100
1643	SO1328	-8892.5	113	15*100
1644	SO1329	-8907.5	243	15*100
1645	SO1330	-8922.5	113	15*100
1646	SO1331	-8937.5	243	15*100
1647	SO1332	-8952.5	113	15*100
1648	SO1333	-8967.5	243	15*100
1649	SO1334	-8982.5	113	15*100
1650	SO1335	-8997.5	243	15*100

No.	Name	X	Y	Bump size(um)
1651	SO1336	-9012.5	113	15*100
1652	SO1337	-9027.5	243	15*100
1653	SO1338	-9042.5	113	15*100
1654	SO1339	-9057.5	243	15*100
1655	SO1340	-9072.5	113	15*100
1656	SO1341	-9087.5	243	15*100
1657	SO1342	-9102.5	113	15*100
1658	SO1343	-9117.5	243	15*100
1659	SO1344	-9132.5	113	15*100
1660	SO1345	-9147.5	243	15*100
1661	SO1346	-9162.5	113	15*100
1662	SO1347	-9177.5	243	15*100
1663	SO1348	-9192.5	113	15*100
1664	SO1349	-9207.5	243	15*100
1665	SO1350	-9222.5	113	15*100
1666	SO1351	-9237.5	243	15*100
1667	SO1352	-9252.5	113	15*100
1668	SO1353	-9267.5	243	15*100
1669	SO1354	-9282.5	113	15*100
1670	SO1355	-9297.5	243	15*100
1671	SO1356	-9312.5	113	15*100
1672	SO1357	-9327.5	243	15*100
1673	SO1358	-9342.5	113	15*100
1674	SO1359	-9357.5	243	15*100
1675	SO1360	-9372.5	113	15*100
1676	SO1361	-9387.5	243	15*100
1677	SO1362	-9402.5	113	15*100
1678	SO1363	-9417.5	243	15*100
1679	SO1364	-9432.5	113	15*100
1680	SO1365	-9447.5	243	15*100
1681	SO1366	-9462.5	113	15*100
1682	SO1367	-9477.5	243	15*100
1683	SO1368	-9492.5	113	15*100
1684	SO1369	-9507.5	243	15*100
1685	SO1370	-9522.5	113	15*100
1686	SO1371	-9537.5	243	15*100
1687	SO1372	-9552.5	113	15*100
1688	SO1373	-9567.5	243	15*100
1689	SO1374	-9582.5	113	15*100
1690	SO1375	-9597.5	243	15*100
1691	SO1376	-9612.5	113	15*100
1692	SO1377	-9627.5	243	15*100
1693	SO1378	-9642.5	113	15*100
1694	SO1379	-9657.5	243	15*100
1695	SO1380	-9672.5	113	15*100
1696	SO1381	-9687.5	243	15*100
1697	SO1382	-9702.5	113	15*100
1698	SO1383	-9717.5	243	15*100
1699	SO1384	-9732.5	113	15*100
1700	SO1385	-9747.5	243	15*100

Himax Confidential
Do Not Copy

No.	Name	X	Y	Bump size(um)
1701	SO1386	-9762.5	113	15*100
1702	SO1387	-9777.5	243	15*100
1703	SO1388	-9792.5	113	15*100
1704	SO1389	-9807.5	243	15*100
1705	SO1390	-9822.5	113	15*100
1706	SO1391	-9837.5	243	15*100
1707	SO1392	-9852.5	113	15*100
1708	SO1393	-9867.5	243	15*100
1709	SO1394	-9882.5	113	15*100
1710	SO1395	-9897.5	243	15*100
1711	SO1396	-9912.5	113	15*100
1712	SO1397	-9927.5	243	15*100
1713	SO1398	-9942.5	113	15*100
1714	SO1399	-9957.5	243	15*100
1715	SO1400	-9972.5	113	15*100
1716	SO1401	-9987.5	243	15*100
1717	SO1402	-10002.5	113	15*100
1718	SO1403	-10017.5	243	15*100
1719	SO1404	-10032.5	113	15*100
1720	SO1405	-10047.5	243	15*100
1721	SO1406	-10062.5	113	15*100
1722	SO1407	-10077.5	243	15*100
1723	SO1408	-10092.5	113	15*100
1724	SO1409	-10107.5	243	15*100
1725	SO1410	-10122.5	113	15*100
1726	SO1411	-10137.5	243	15*100
1727	SO1412	-10152.5	113	15*100
1728	SO1413	-10167.5	243	15*100
1729	SO1414	-10182.5	113	15*100
1730	SO1415	-10197.5	243	15*100
1731	SO1416	-10212.5	113	15*100
1732	SO1417	-10227.5	243	15*100
1733	SO1418	-10242.5	113	15*100
1734	SO1419	-10257.5	243	15*100
1735	SO1420	-10272.5	113	15*100
1736	SO1421	-10287.5	243	15*100
1737	SO1422	-10302.5	113	15*100
1738	SO1423	-10317.5	243	15*100
1739	SO1424	-10332.5	113	15*100
1740	SO1425	-10347.5	243	15*100
1741	SO1426	-10362.5	113	15*100
1742	SO1427	-10377.5	243	15*100
1743	SO1428	-10392.5	113	15*100
1744	SO1429	-10407.5	243	15*100
1745	SO1430	-10422.5	113	15*100
1746	SO1431	-10437.5	243	15*100
1747	SO1432	-10452.5	113	15*100
1748	SO1433	-10467.5	243	15*100
1749	SO1434	-10482.5	113	15*100
1750	SO1435	-10497.5	243	15*100

No.	Name	X	Y	Bump size(um)
1751	SO1436	-10512.5	113	15*100
1752	SO1437	-10527.5	243	15*100
1753	SO1438	-10542.5	113	15*100
1754	SO1439	-10557.5	243	15*100
1755	SO1440	-10572.5	113	15*100
1756	SO1441	-10587.5	243	15*100
1757	SO1442	-10602.5	113	15*100
1758	SO1443	-10617.5	243	15*100
1759	SO1444	-10632.5	113	15*100
1760	SO1445	-10647.5	243	15*100
1761	SO1446	-10662.5	113	15*100
1762	SO1447	-10677.5	243	15*100
1763	SO1448	-10692.5	113	15*100
1764	SO1449	-10707.5	243	15*100
1765	SO1450	-10722.5	113	15*100
1766	SO1451	-10737.5	243	15*100
1767	SO1452	-10752.5	113	15*100
1768	SO1453	-10767.5	243	15*100
1769	SO1454	-10782.5	113	15*100
1770	SO1455	-10797.5	243	15*100
1771	SO1456	-10812.5	113	15*100
1772	SO1457	-10827.5	243	15*100
1773	SO1458	-10842.5	113	15*100
1774	SO1459	-10857.5	243	15*100
1775	SO1460	-10872.5	113	15*100
1776	SO1461	-10887.5	243	15*100
1777	SO1462	-10902.5	113	15*100
1778	SO1463	-10917.5	243	15*100
1779	SO1464	-10932.5	113	15*100
1780	SO1465	-10947.5	243	15*100
1781	SO1466	-10962.5	113	15*100
1782	SO1467	-10977.5	243	15*100
1783	SO1468	-10992.5	113	15*100
1784	SO1469	-11007.5	243	15*100
1785	SO1470	-11022.5	113	15*100
1786	SO1471	-11037.5	243	15*100
1787	SO1472	-11052.5	113	15*100
1788	SO1473	-11067.5	243	15*100
1789	SO1474	-11082.5	113	15*100
1790	SO1475	-11097.5	243	15*100
1791	SO1476	-11112.5	113	15*100
1792	SO1477	-11127.5	243	15*100
1793	SO1478	-11142.5	113	15*100
1794	SO1479	-11157.5	243	15*100
1795	SO1480	-11172.5	113	15*100
1796	SO1481	-11187.5	243	15*100
1797	SO1482	-11202.5	113	15*100
1798	SO1483	-11217.5	243	15*100
1799	SO1484	-11232.5	113	15*100
1800	SO1485	-11247.5	243	15*100

Himax Confidential
Do Not Copy

No.	Name	X	Y	Bump size(um)
1801	SO1486	-11262.5	113	15*100
1802	SO1487	-11277.5	243	15*100
1803	SO1488	-11292.5	113	15*100
1804	SO1489	-11307.5	243	15*100
1805	SO1490	-11322.5	113	15*100
1806	SO1491	-11337.5	243	15*100
1807	SO1492	-11352.5	113	15*100
1808	SO1493	-11367.5	243	15*100
1809	SO1494	-11382.5	113	15*100
1810	SO1495	-11397.5	243	15*100
1811	SO1496	-11412.5	113	15*100
1812	SO1497	-11427.5	243	15*100
1813	SO1498	-11442.5	113	15*100
1814	SO1499	-11457.5	243	15*100
1815	SO1500	-11472.5	113	15*100
1816	SO1501	-11487.5	243	15*100
1817	SO1502	-11502.5	113	15*100
1818	SO1503	-11517.5	243	15*100
1819	SO1504	-11532.5	113	15*100
1820	SO1505	-11547.5	243	15*100
1821	SO1506	-11562.5	113	15*100
1822	SO1507	-11577.5	243	15*100
1823	SO1508	-11592.5	113	15*100
1824	SO1509	-11607.5	243	15*100
1825	SO1510	-11622.5	113	15*100
1826	SO1511	-11637.5	243	15*100
827	SO1512	-11652.5	113	15*100
1828	SO1513	-11667.5	243	15*100
1829	SO1514	-11682.5	113	15*100
1830	SO1515	-11697.5	243	15*100
1831	SO1516	-11712.5	113	15*100
1832	SO1517	-11727.5	243	15*100
1833	SO1518	-11742.5	113	15*100
1834	SO1519	-11757.5	243	15*100
1835	SO1520	-11772.5	113	15*100
1836	SO1521	-11787.5	243	15*100
1837	SO1522	-11802.5	113	15*100
1838	SO1523	-11817.5	243	15*100
1839	SO1524	-11832.5	113	15*100
1840	SO1525	-11847.5	243	15*100

No.	Name	X	Y	Bump size(um)
1841	SO1526	-11862.5	113	15*100
1842	SO1527	-11877.5	243	15*100
1843	SO1528	-11892.5	113	15*100
1844	SO1529	-11907.5	243	15*100
1845	SO1530	-11922.5	113	15*100
1846	SO1531	-11937.5	243	15*100
1847	SO1532	-11952.5	113	15*100
1848	SO1533	-11967.5	243	15*100
1849	SO1534	-11982.5	113	15*100
1850	SO1535	-11997.5	243	15*100
1851	SO1536	-12012.5	113	15*100
1852	SHIELDING	-12055	258	30*70
1853	COM1_OUT	-12105	258	30*70
1854	COM1_OUT	-12155	258	30*70
1855	SHIELDING	-12205	258	30*70
1856	OEVR	-12303	238	80*30
1857	F_CtrlR	-12396.5	278	67*30
1858	SYNC1R	-12396.5	198	67*30
1859	SYNC2R	-12303	158	80*30
1860	UDR	-12396.5	118	67*30
1861	CKVR	-12303	78	80*30
1862	STV2R	-12396.5	38	67*30
1863	STV1R	-12303	-2	80*30
1864	F_CtrlR	-12396.5	-42	67*30
1865	STBNR	-12303	-82	80*30

Align mark	ARK_L	-12131.5	115.5
Align mark	ARK_R	12131.5	115.5

Table 12.2: Pad coordinate

Himax Confidential
Do Not Copy

13. Ordering Information

Part No.	Package Type
HX8282-A01XPDxxx-A	X: mean fab code PD: mean COG xxx: mean chip thickness (μm), default 300μm

14. Revision History

Version	Date	Description of changes
01	2011/07/06	New setup

Himax Confidential
Do Not Copy

This information contained herein is the exclusive property of Himax and shall not be distributed, reproduced, or disclosed in whole or in part without prior written permission of Himax.